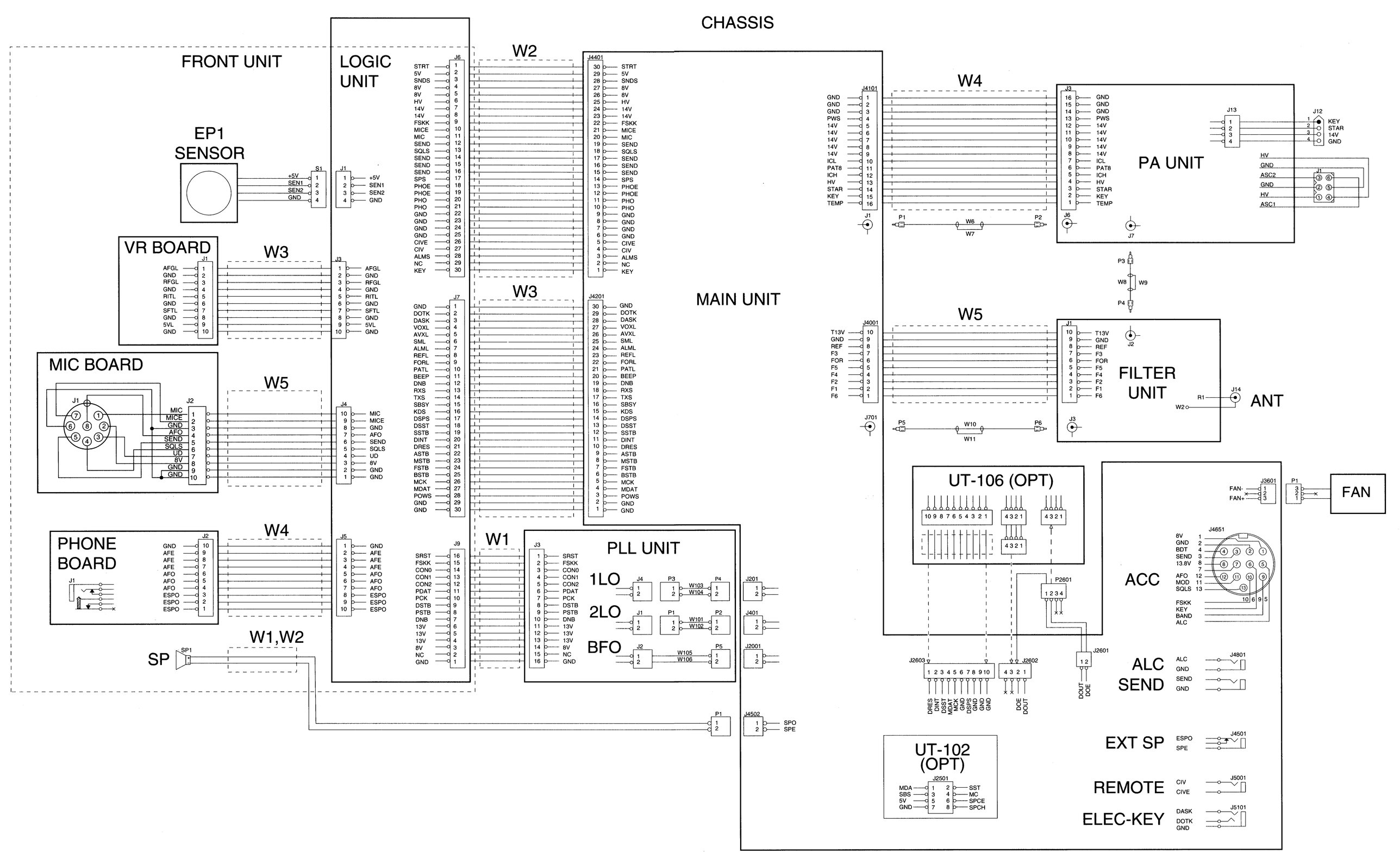
CHASSIS
FRONT UNIT
LOGIC UNIT
EP1 SENSOR
S1
J1
+5V
SEN1
SEN2
GND
VR BOARD
J1
AFGL
GND
RFGL
GND
RITL
GND
SFTL
GND
5VL
GND
W3
J3
MIC BOARD
J1
J2
MIC
MICE
GND
AFO
SEND
SQLS
UD
8V
GND
GND
W5
J4
PHONE BOARD
J1
J2
GND
AFE
AFE
AFE
AFO
AFO
AFO
ESPO
ESPO
ESPO
W4
J5
SP
SP1
W1,W2
J6
STRT
5V
SNDS
8V
8V
HV
14V
14V
FSKK
MICE
MIC
SEND
SQLS
SEND
SEND
SEND
SPS
PHOE
PHOE
PHO
PHO
GND
GND
GND
GND
CIVE
CIV
ALMS
NC
KEY
J7
GND
DOTK
DASK
VOXL
AVXL
SML
ALML
REFL
FORL
PATL
BEEP
DNB
RXS
TXS
SBSY
KDS
DSPS
DSST
SSTB
DINT
DRES
ASTB
MSTB
FSTB
BSTB
MCK
MDAT
POWS
GND
GND
J9
SRST
FSKK
CON0
CON1
CON2
PDAT
PCK
DSTB
PSTB
DNB
13V
13V
13V
8V
NC
GND
W2
W3
W1
J4401
J4201
PLL UNIT
1LO
2LO
BFO
J4
J1
J2
P3
P4
P1
P2
P5
W103
W104
W101
W102
W105
W106
J201
J401
J2001
J4502
SPO
SPE
MAIN UNIT
J4101
GND
GND
GND
PWS
14V
14V
14V
14V
14V
ICL
PAT8
ICH
HV
STAR
KEY
TEMP
J1
P1
P2
W6
W7
W4
J3
J13
J12
KEY
STAR
14V
GND
HV
GND
ASC2
GND
HV
ASC1
PA UNIT
J6
J7
P3
P4
W8
W9
J4001
T13V
GND
REF
F3
FOR
F5
F4
F2
F1
F6
J701
P5
P6
W10
W11
W5
J1
J2
J3
FILTER UNIT
R1
W2
J14
ANT
UT-106 (OPT)
10 9 8 7 6 5 4 3 2 1
4 3 2 1
J3601
FAN-
FAN+
P1
FAN
J4651
8V
GND
BDT
SEND
13.8V
AFO
MOD
SQLS
FSKK
KEY
BAND
ALC
ACC
P2601
J2603
J2602
J2601
DRES
DINT
DSST
MDAT
MCK
GND
DSPS
GND
GND
GND
DOE
DOUT
DOUT
DOE
ALC
SEND
J4801
ALC
GND
SEND
GND
EXT SP
J4501
ESPO
SPE
REMOTE
J5001
CIV
CIVE
ELEC-KEY
J5101
DASK
DOTK
GND
UT-102 (OPT)
J2501
MDA
SBS
5V
GND
SST
MC
SPCE
SPCH

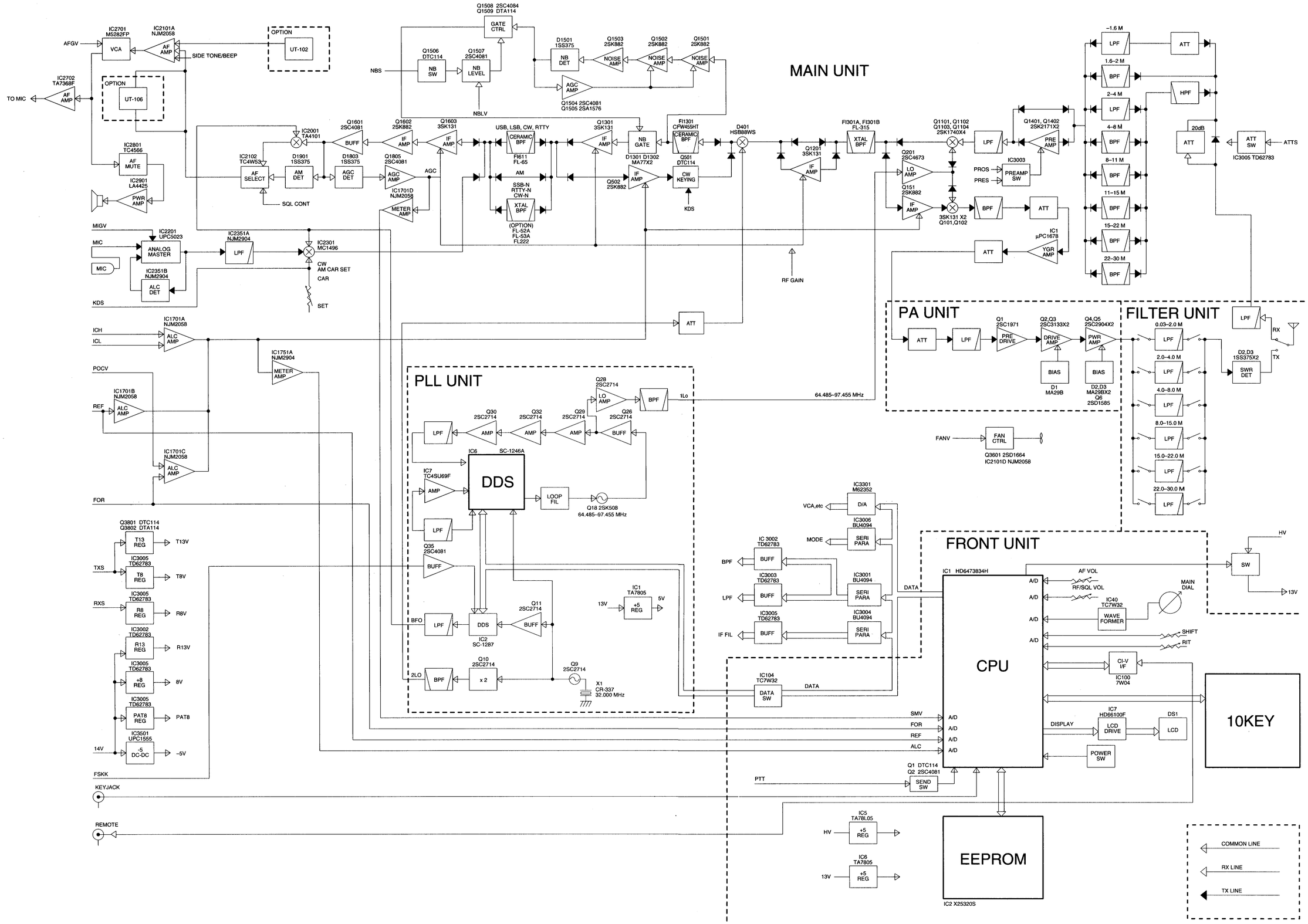

To upgrade quality, some components may be subject to change without notice.

A-5649MH-2G
Printed in Japan
© 2000 Icom Inc.

ICOM ② **IC-718** SCHEMATIC DIAGRAM

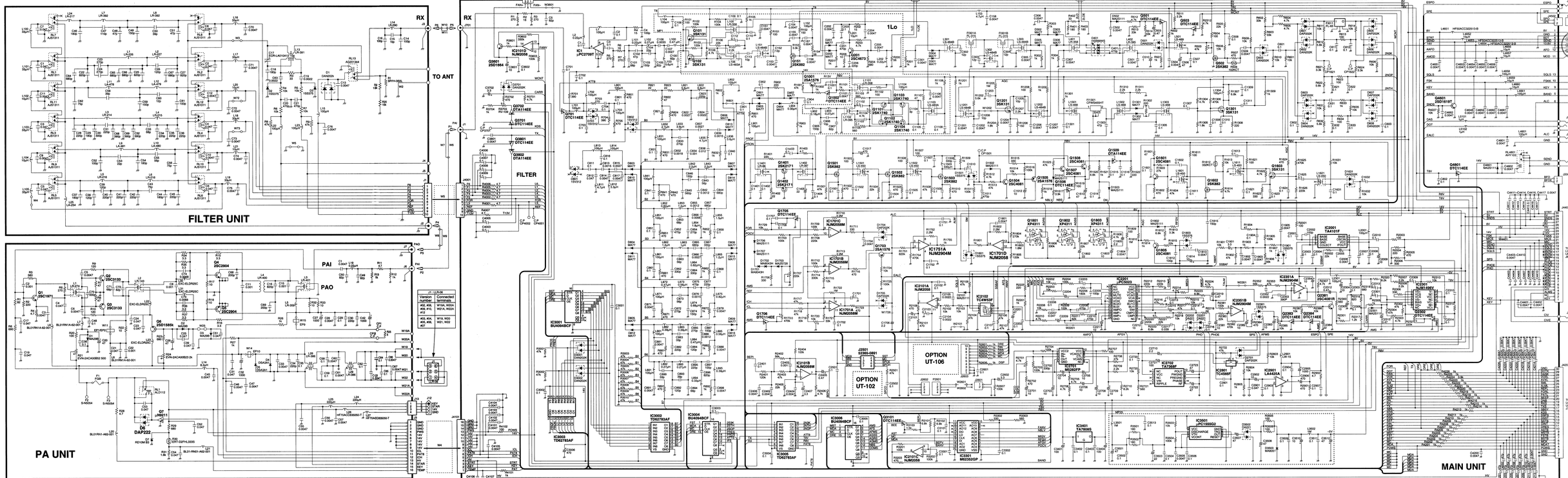

Version number	Connected terminals
#02, #06, #10, #14	W15A, W03A, W21, W22A
#03, #04, #08, #09, #07	W15, W02, W21, W22

To upgrade quality, some components may be subject to change without notice.

A-5649MH-3G
Printed in Japan
© 2000 Icom Inc.

Icom Inc.

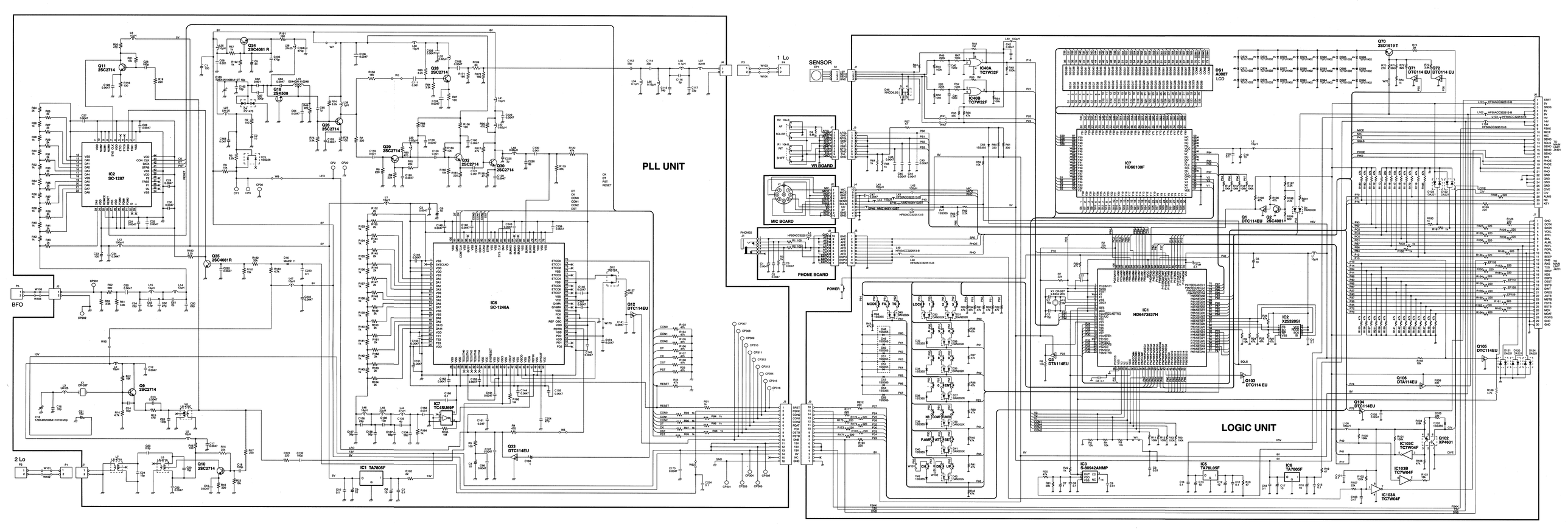
PLL UNIT
LOGIC UNIT
IC2 SC-1287
IC6 SC-1246A
IC7 TC4SU69F
IC1 TA7805F
IC1 HD6473837H
IC7 HD66100F
DS1 A0087 LCD
IC40A TC7W32F
IC40B TC7W32F
IC3 S-80042ANMP
IC5 TA78L05F
IC6 TA7805F
IC3 X25320SI
IC103C TC7W04F
IC103B TC7W04F
IC103A TC7W04F
SENSOR
VR BOARD
MIC BOARD
PHONE BOARD
BFO
1 Lo
2 Lo
POWER