DJ-180
DJ-1400 Service Manual

CONTENTS

SPECIFICATIONS
- 1) General 2
- 2) Transmitter. 2
- 3) Receiver 2
- 4) Functions for Each Version 3

CIRCUIT DESCRIPTION
- 1) Receiver System 4
- 2) PLL VCO Circuit. 5
- 3) Transmitter System 5
- 4) DTMF Encoder Circuit (option). 6
- 5) Tone Squelch Circuit (option) 6
- 6) Microprocessor and Peripheral Circuit 6
- 7) Terminal Function of Microprocessor 7

SEMICONDUCTOR DATA
- 1) LR408721 10
- 2) M5218FP 10
- 3) M5236ML. 10
- 4) MB1504LPF 11
- 5) MC3357 11
- 6) MX365 12
- 7) NJM386 13
- 8) RH5VA32AA. 13
- 9) RH5VA45AA. 13
- 10) X24C01A 14
- 11) X24C04S14 14
- 12) X24C16S14 14
- 13) Transistor, Diode and LED Outline Draw 15
- 14) LCD Connection. 16

EXPLODED VIEW
- 1) Rear Case 1 17
- 2) LCD 17
- 3) Rear Case 2 18
- 4) Front Case 1 19
- 5) Front Case 2 20
- 6) Front Case 3 and Battery Terminal 21
- 7) Ten Key Cover and Key Pad Panel 22
- 8) CTCSS Unit and ROM1 Unit 23

PC BOARD VIEW
- 1) VCO Unit 24
- 2) JACK Unit 24
- 3) PTT Unit Side B 24
- 4) PS Unit 25
- 5) ROM1 Unit Side B 25
- 6) ROM2 Unit Side B 25
- 7) RF Unit Side A 26
- 8) RF Unit Side B 27
- 9) CPU Unit Side A. 28
- 10) CPU Unit Side B 29
- 11) RE Unit 30
- 12) CTCSS UniL 30
- 13) DTMF Unit. 31

PARTS LAST
- CPU unit 32
- PS unit. 32
- ROM1 Unit 33
- DTMF Unit 33
- RF Unit 33 ~ 36
- Vco unit 37
- CTCSS Unit 37
- PTT SW Unit 38
- JACK Unit 38
- RE Unit 38
- Others 38
- ROM2 Unit. 38
- PACKING 38
- Parts Table for Each Version. 39

ADJUSTMENT
- 1) Required Test Equipment. 40
- 2) Before Adjustment 40
- 3) Adjustment for DJ180, DJ1400 41
- 4) Adjustment for DJ1400AN/QN 42
- 5) Adjustment Quick Reference 43
- 6) Adjustment Points. 43 ~ 44

CIRCUIT DIAGRAM 45 ~ 46

BLOCK DIAGRAM 47

ALINCO INCORPORATED

TWIN 21 M.I.D. TOWER BUILDING 23F, 1-61, 2-CHOME, SHIROMI CHUO-KU , OSAKA, 540-8580 JAPAN

Tel (81)6-6946-8150 fax (81)6-6946-8175

e-mail: export@alinco.co.jp

SPECIFICATIONS

DJ-180

1) General

Frequency Coverage:	
	RX: 137.000 ~ 173.995MHz (T, TM version)
	TX: 144.000 ~ 147.995MHz (T, TM version)
	RX: 137.000 ~ 173.995MHz (TA, TB, TA2, TB2 version)
	TX: 137.000 ~ 173.995MHz (TA, TB, TA2, TB2 version)
	RX/TX: 144.000~145.995MHz(TS, TSA, TZ, E, EA, EB version)
Frequency Resolution:	5, 10, 12.5, 15, 20, 25kHz steps
Memory Channels:	10 Channels (standard)
Antenna Impedance:	50 ohm unbalanced
Signal Type:	F3E(FM)
Power Supply Requirement:	DC 5.5V~13.8V (Rated 7.2V Ni-Cd)
Dimensions:	Approximately 132(H) x 58(W) x 33(D) mm
Weight :	Approximately 350g

2) Transmitter

Output Power.I	5.0W with Optional 12V Ni-Cd Battery
	2.0W with Standard 7.2V Ni-Cd Battery
	(144.000~147.995MHz)
	(160.000~165.000MHz)... TA2, TB2 only
Modulation System:	Variable Reactance Frequency Modulation
Max. Frequency Deviation:	+/ -5kHz
Tone Frequency:	67.0 to 250.3Hz -38 Subaudible Encoding Tones
	(E, EA, EB version: option)
DTMF Encoder:	(TZ, EB version: option)
Tone Burst:	(E, EA, EB version only)

3) Receiver

Receiver System:	Double-Conversion Superheterodyne
Intermediate Frequency.'	1st IF: 21.4MHz
	2nd IF: 455kHz
Sensitivity:	12dB SINAD less than -10dBu
	(144.000~17.995MHz)
	(160.000~165.000MHz)... TA2, TB2 only

SPECIFICATIONS

DJ-1400QN / AN (The Narrow Version)

1) General

Frequency Coverage:	
	136.000 ~ 155.000MHz (AN version)
	150.000 ~ 173.995MHz (QN version)
Frequency Resolution:	5, 10, 12.5, 15, 20, 25kHz steps
Memory Channels:	10 Channels (standard)/option 50 and 200ch
Antenna Impedance:	50 ohm unbalanced
Signal Type:	F3E(FM)
Power Supply Requirement:	DC 5.5V~13.8V (Rated 7.2V Ni-Cd)
Dimensions:	Approximately 132(H) x 58(W) x 33(D) mm
Weight :	Approximately 350g

2) Transmitter

Output Power.I	5.0W with Optional 12V Ni-Cd Battery
	2.0W with Standard 7.2V Ni-Cd Battery
Modulation System:	Variable Reactance Frequency Modulation
Max. Frequency Deviation:	+/ -2.5kHz
Tone Frequency:	67.0 to 250.3Hz -38 Subaudible Encoding Tones
Time Out Timer	0 to 450 sec
Time Out Penalty	0 to 15 sec

3) Receiver

Receiver System:	Double-Conversion Superheterodyne
Intermediate Frequency.'	1st IF: 21.4MHz
	2nd IF: 455kHz
Sensitivity:	12dB SINAD less than -16dBu
AF Output	200mW (10% THD)

4) DTMF Encoder Circuit (option)

The DTMF signal corresponding to the combination of the column and row is output from tone output pin17 of IC401 Encoder, producing a frequency-modulated RF output. The Q401 switches the DTMF Encoder when lC401 is active during DTMF transmission.

5) Tone Squelch Circuit (option)

1.Decoder

The second IF signalfrom pin11 of IC1, and input to the tone squelch decoder lC701.
When the tone squelch decoder IC701 decodes the input tone signal frequency as the programmed frequency, pin13 goes to "Low". The signal is input to pin16(DET) of lC107, and the squelch goes off.
When the Tone squelch decoder IC701 does not decode the input tone signal frequency as the programmed frequency, pin13 goes to "High".

2. Encoder

The tone signal is output from pin16 of IC701, producing a frequency-modulated RF output.

6) Microprocessor (CPU) and Peripheral Circuit

Refer to "Terminal Function of Microprocessor" about each terminal function.

1, BS Mode

When the Squelch is closed for more than 5 seconds, the radio goes into the BS(Battery Save) mode automatically. Pin11 (R5C) and pin19 become High or Low periodically. Open the Squelch, and the radio does not go into the BS mode.

2. Backup Reset

When the voltage detector circuit lC303 detects a decrease in the C5V line, CPU RAM data is stored in the EEPROM IC, IC601. IC 302 is also the voltage detector circuit and it detects the lower voltage than IC303. The circuit detects a increase in the C5V line when power is turned on, and then the CPU will be initialized.

3. Reset

Press and holdthe."F" key, then turn on the power. The radio will reset to initial factory settings.
Even if you expanded the frequency, it will return to the initial setting. To resume the expanded frequency, press and hold the "F" and "Lamp" keys, then turn on the power.

7) Terminal Function of Microprocesser

Name	I/O	Description	PinNo.	PinName	H	L
TBST	O	1750Hz Tone Burst Output	9	P57/PWM3	Normal:H(HiZ)	Output:Pluse
BEEP	O	Beep Tone Output	10	P56/PWM2	Normal:H(HiZ)	Output:Pluse
R5C	O	RX5V ON/OFF	11	P55/PWM1	ON	OFF
T5C	O	TX5V ON/OFF	12	P54/PWM0	ON	OFF
AFP	O	AF Power Amplifier ON/OFF	13	P53/SIG	ON	OFF
AFC	O	IF Mute Output	14	P52/CNT2	Mute OFF during Tone Burst	Mute ON
M.MUTE	O	Microphone Mute Output	15	P5l/CNT1	Tansmission	Normal
RE1	I	Rotary Encoder Input 1	16	P50/INT3		
LAMP	O	Lamp ON/OFF Switch	17	P37/SRDY	ON	OFF
BAT	I	Battery Low lndicator Input	18	P36/CLK	Low	Normal
P5C	O	PLL Power ON/OFF	19	P35/SOUT	ON	OFF
EICD	I	EEPROM Unit Detection	20	P34/SIN	Equipped	Nothing
XWR	I	External EEPROM Write Cycle Detection	21	P33rr	Normal	Write cycle
RE2	I	Rotary Encoder Input 2	22	P32/INT2		
SCOM	O	Band Plan Scan Output	23	P3l/XCIN	H(Hiz)	Low Active
P.H/L	O	Transmit Power Switch	24	P30/XCOUT	Low Power	High Power
BU	I	Back up Mode Input	25	INT1	Normal	Negative Edge Triggered
			26	CNVss		
RES	I	Reset Input	27	RESET	at Work	on Reset
		Clock Input 3.58MHz	28	XIN		
		Clock Output 3.58MHz	29	XOUT		
		Ground	30	Vss		
TSQD	I	Tone Detecton Input	31	P17	Undetected	Detected
TICD	I	Tone Unit Detection	32	P16	Nothing	Equipped
BP1	I	Band Plan(TX)	33	P15	Expanded	Normal
BP2	I	Band Plan(RX)	34	P14	Expanded	Normal
BP3	I	Band PIan(TX,RX)	35	P13	Expanded	Normal

SEMICONDUCTOR DATA

1) LR408721 (XA0042)
Tone Dialer

Test Circuit

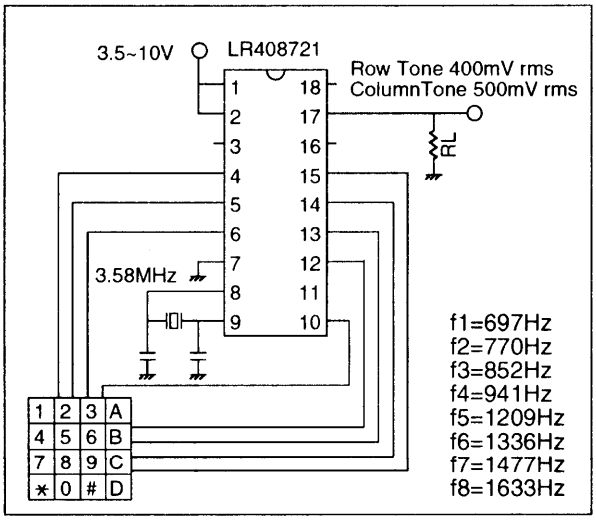

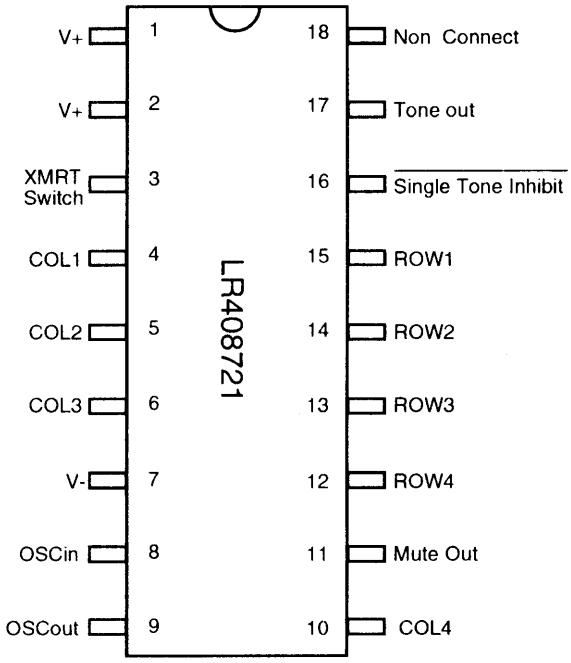

2) M5218FP (XA0068)
Dual Low Noise
Operational Amplifiers

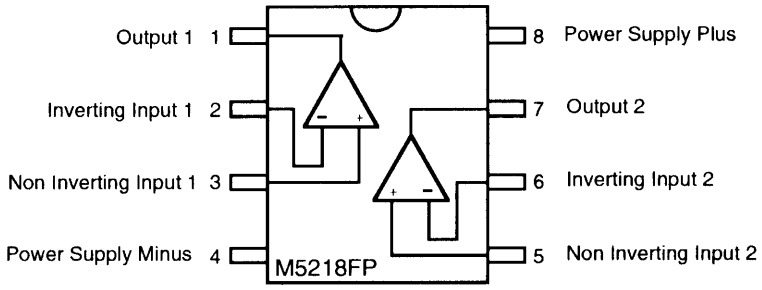

3) M5236ML (XA0104)
Voltage Regulator

Test Circuit

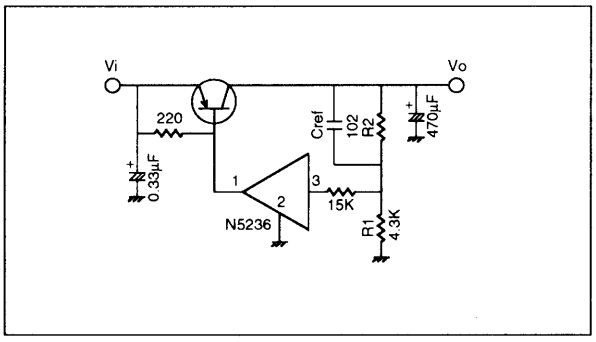

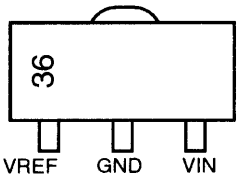

M5236ML

4) MB1504LPF-G-BND-TF (XA0145)

Frequency Synthesizer

Function Table

FC input	P.D.input	Do output
High or Low	fr=fp	Hi Z
High	fr>fp	High
High	fr<fp	Low
Low	fr>fp	Low
Low	fr<fp	High

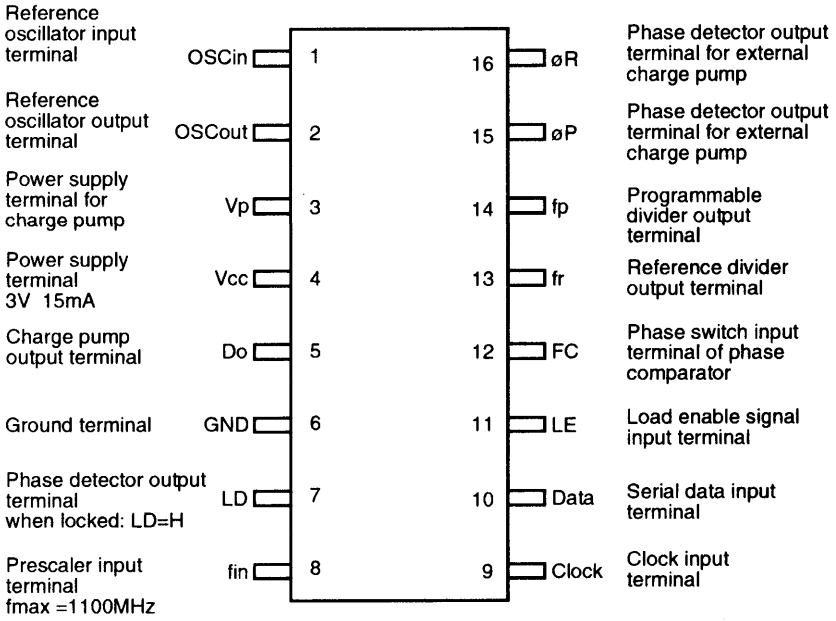

5) MC3357 (XA0063)

Narrow Band FM IF IC

Vcc=6V
F=10.7MHz
Icc 3mA
Limit 5μV -3dB
Vo 350mV Dev=+/-3KHz

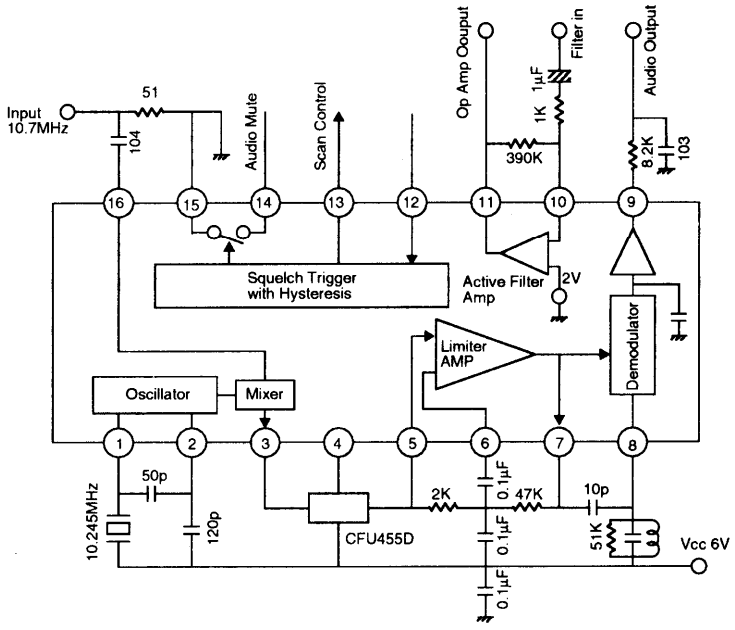

6) MX365 (XA0203)
CTCSS Encoder/Decoder

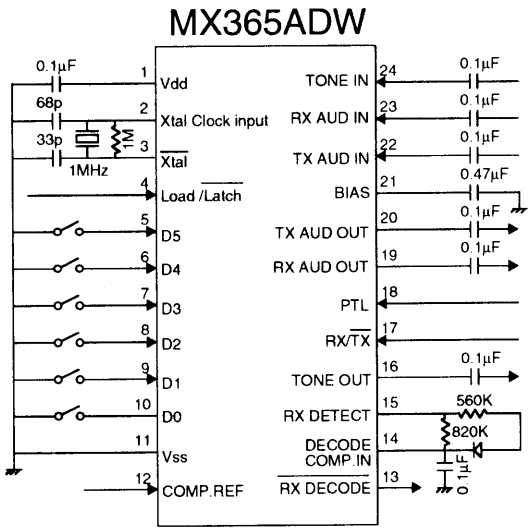

Decode Comparator Ref: This pin is internally biased to VDD/3 or 2VDD/3 via 1M resistors depending on the logical state of the Rx Tone Decode Out pin. Rx Tone Decode Out = 1 will bias bias this input 2VDD/3; a logic "0" will bias this input VDD/3. This input provides the decode comparator reference voltage, and switching of bias voltages provides hysteresis to reduce "chatter" under marginal conditions.

$\overline{\text{RX Tone Decode Out}}$: This is the gated output of the decode comparator. This output is used to gate the RX Audio path. A logic "0" on this pin indicates a successful decode and that the Decode Comparator Input pin is more positive than the Decode Comparator Ref. input.

Decode Comparator Input: This is the inverting input of the decode comparator. This pin is normally connected to the integrated output of the Rx Tone Detect line.

Rx Tone Detect : In Rx mode this pin will go to logic '1' during a successful decode. It must be externally integrated to control response and deresponse times.

Tx Tone Out: The CTCSS sinewave output appears on this pin under the control of the Rx/$\overline{\text{Tx}}$ pin. This pin, when not transmitting a tone, may be biased to VDD/2 - 0.7V or O/C .

Rx/$\overline{\text{Tx}}$: This input (in parallel mode) selects Rx or Tx modes . In serial mode this function is serially loaded. This pin is internally pulled to VDD via a 1 MΩ resistor.

PTL: In parallel Rx mode this pin operates as a 'Press To Listen' function by enabling the Rx audio path, thus overriding the tone squelch function. In parallel Tx mode this pin reverses the phase of the transmitted CTCSS tone (used for squelch tail elimination). In serial mode this function is serially loaded.

Rx Audio Out: This is the high pass filtered receive audio output pin. This pin outputs audio when Rx TONE DECODE = 0, or PTL = 1, or when Notone is programmed. In Tx mode this pin is biased to VDD/2.

Tx Audio Out: This is the high pass filtered transmit audio output pin. In Tx mode this pin outputs audio present at the Tx Audio Input pin. In Rx mode this pin is biased to VDD/2.

Bias: This pin is the output of an internally generated VDD/2 bias level and would normally be externally decoupled to Vss via C7.

Tx Audio In: This is the Tx Audio input pin. In Tx mode it may be prefiltered, using the Tx audio path, thus helping to avoid talk off due to intermodulation of speech frequencies with the transmitted CTCSS tone. This pin is internally biased to VDD/2.

Rx Audio In: This is the input to the audio high pass filter in Rx mode. It is internally biased to VDD/2.

Tone Input: This is the input to the CTCSS tone detector. It is internally biased to VDD/2.

7) NJM386 (XA0061)
Dual Power Amplifiers

V+=9V RL=16Ω Po=500mW

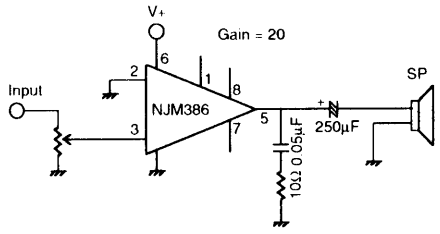

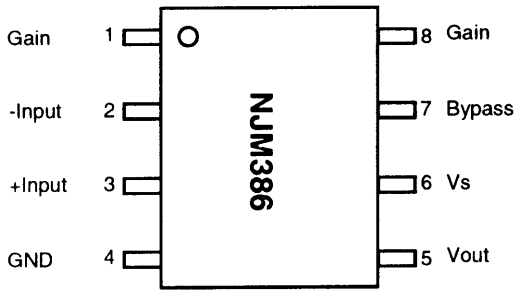

8) RH5VA32AA-T1 (XA0198)
C-MOS Voltage Detector

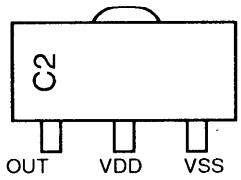

RH5VA32AA

Equivalent Circuit

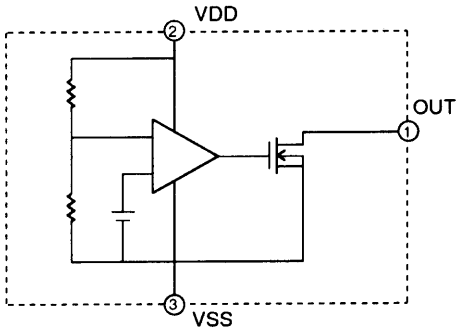

9) RH5VA45AA-T1 (XA0208)
C-MOS Voltage Detector

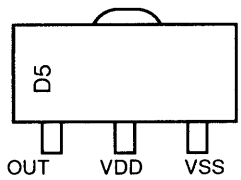

RH5VA45AA

Equivalent Circuit

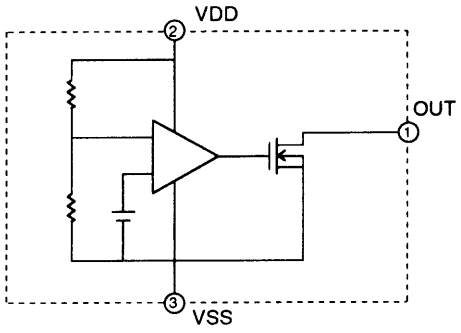

10) X24C01A (XA0199)
EEPROM 1024Bit

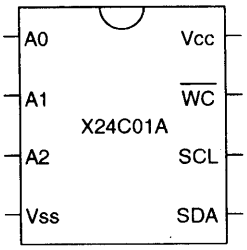

Pin Names

A0 ~ A2	Address inputs
SDA	Serial Data
SCL	Serial Clock
WC	Write Control
Vss	Ground
Vcc	+5V

11) X24C04S14 (XA0200)
EEPROM 4096Bit

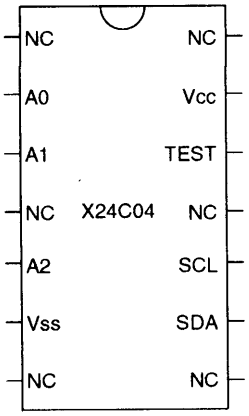

Pin Names

A0 ~ A2	Address inputs
SDA	Serial Data
SCL	Serial Clock
TEST	Hold at Vss
Vss	Ground
Vcc	+5V
NC	No Connect

12) X24C16S14 (XA0201)
EEPROM 16384Bit

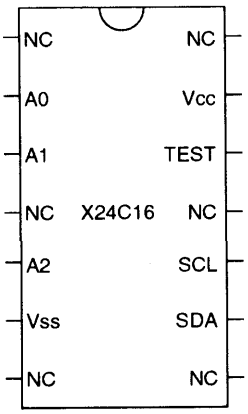

Pin Names

A0 ~ A2	Address inputs
SDA	Serial Data
SCL	Serial Clock
TEST	Hold at Vss
Vss	Ground
Vcc	+5V
NC	No Connect

13) Transistor, Diode and LED Outline Drawings

2SA1162	2SA1213	2SC1971	2SC2053	2SC2412	2SC3356	2SC4081	2SC4099
XT0068	XT0088	XT0101	XT0052	XT0037	XT0030	XT0095	XT0096
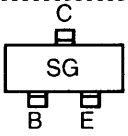	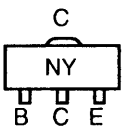	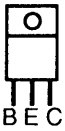	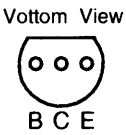	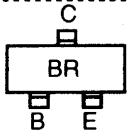	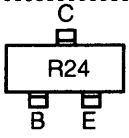	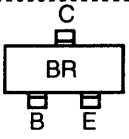	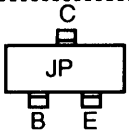
2SC4393	2SK302	UN211L	UL211H	UN2214	UN2115		
XT0097	XE0009	XU0039	XU0040	XU0038	XU0037		
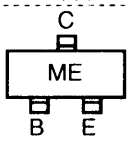	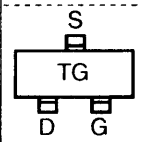	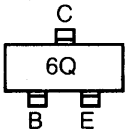	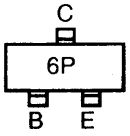	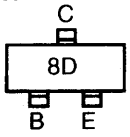	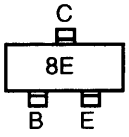		
1SS184	1SV217	1SS226	1SS318	DTZ2.4A	DTZ6.2A	MA704WK	MA716
XD0057	XD0233	XD0103	XD0129	XD0147	XD0137	XD0120	XD0118
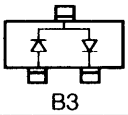		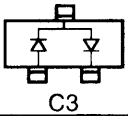				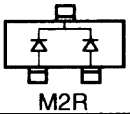	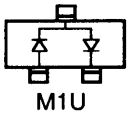
RB450F	RLS135	SLM-13MWS					
XD0134	XD0066	XL0016					
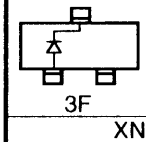	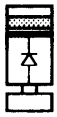	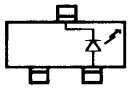					
XN111F		XN1214		XN1A312		XN1401	
XU0036		XU0035		XU0041		XT0034	
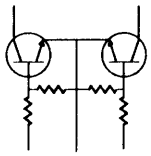		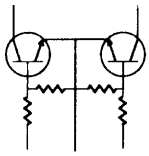		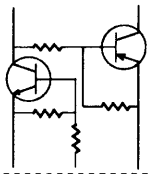		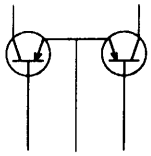	
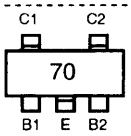		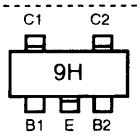		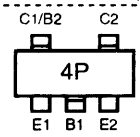		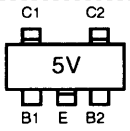	

14) LCD Connection

COMMON

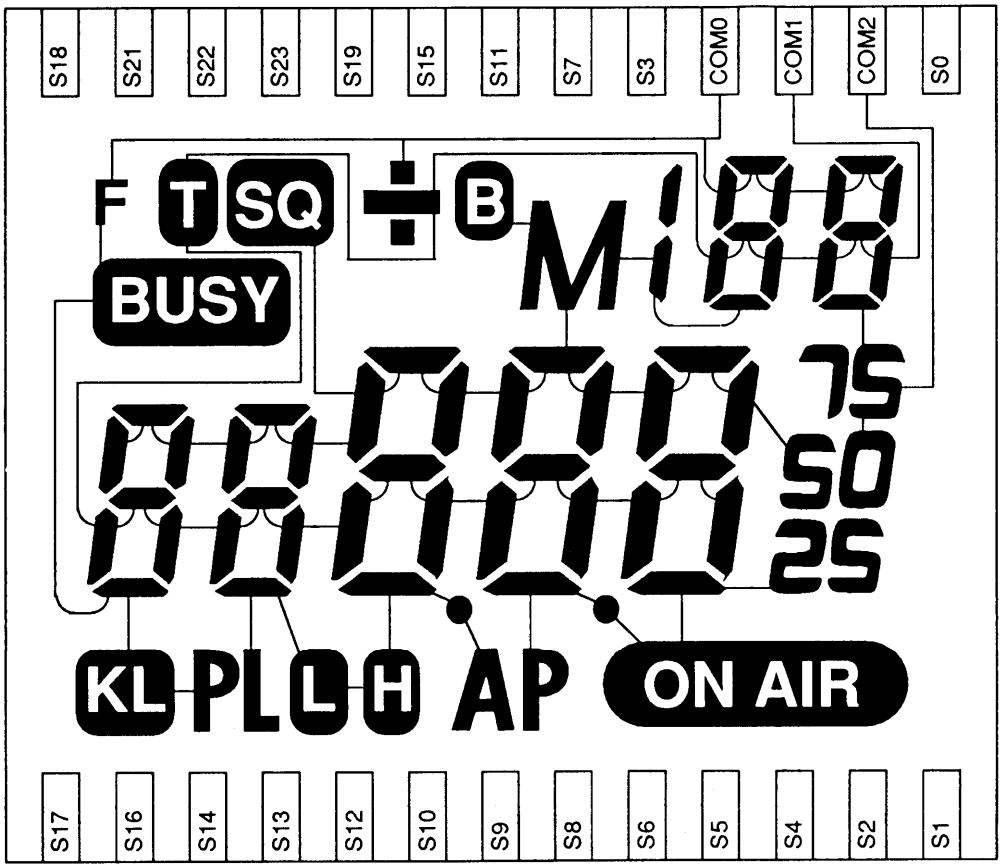

SEGMENT

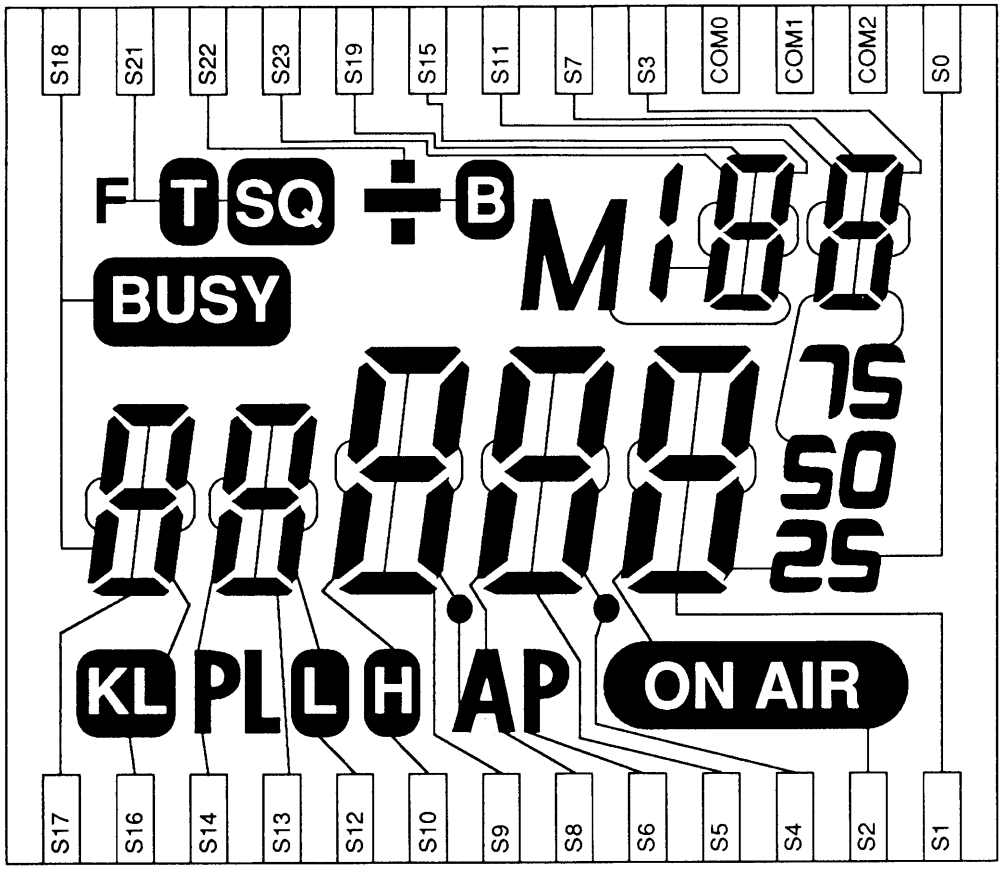

EXPLODED VIEW

1) Rear Case 1

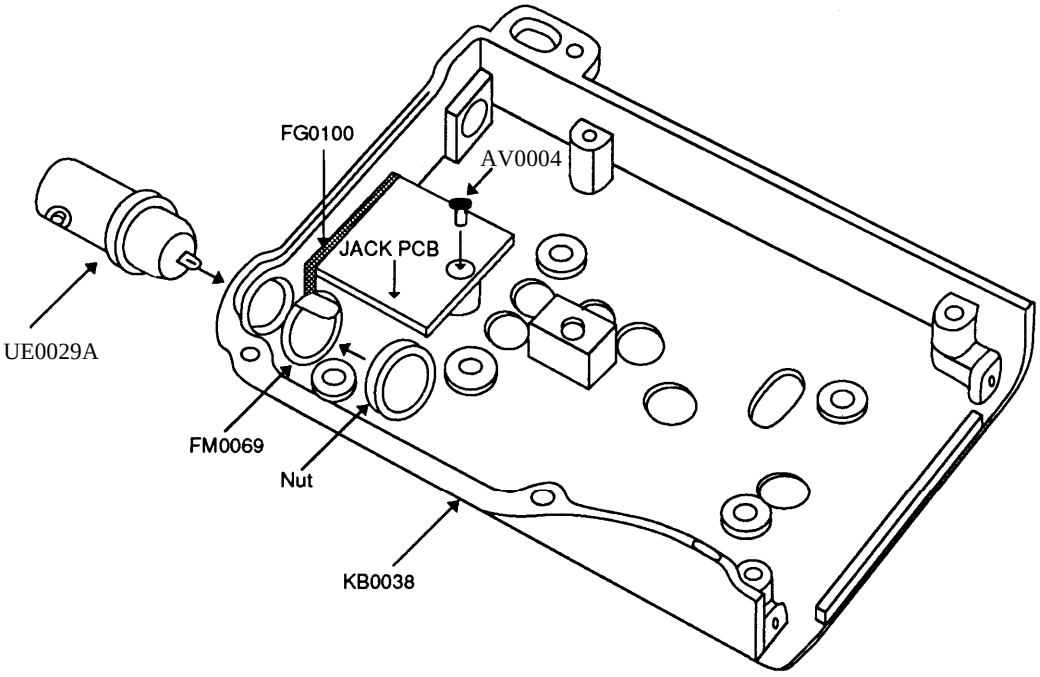

2) LCD Assembly

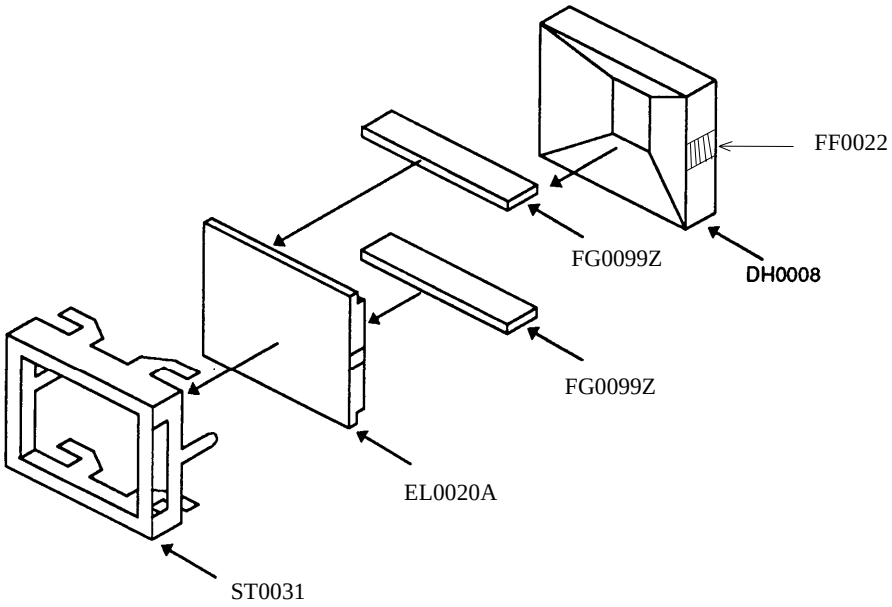

3) Rear Case 2

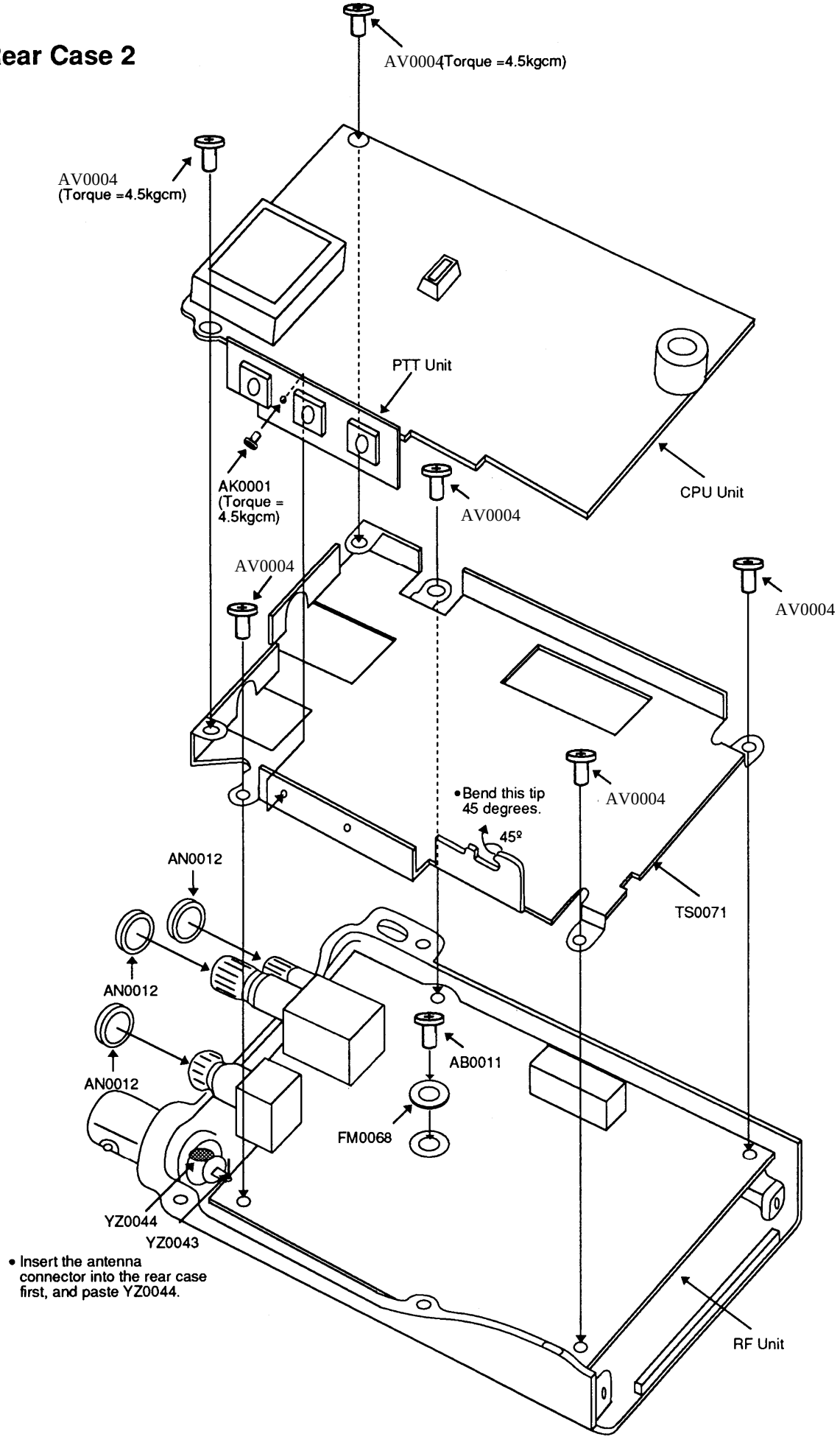
AV0004(Torque =4.5kgcm)
AV0004
(Torque =4.5kgcm)
PTT Unit
AK0001
(Torque =
4.5kgcm)
AV0004
CPU Unit
AV0004
AV0004
AV0004
•Bend this tip
45 degrees.
45º
TS0071
AN0012
AN0012
AN0012
AB0011
FM0068
YZ0044
YZ0043
• Insert the antenna
connector into the rear case
first, and paste YZ0044.
RF Unit

4) Front Case 1

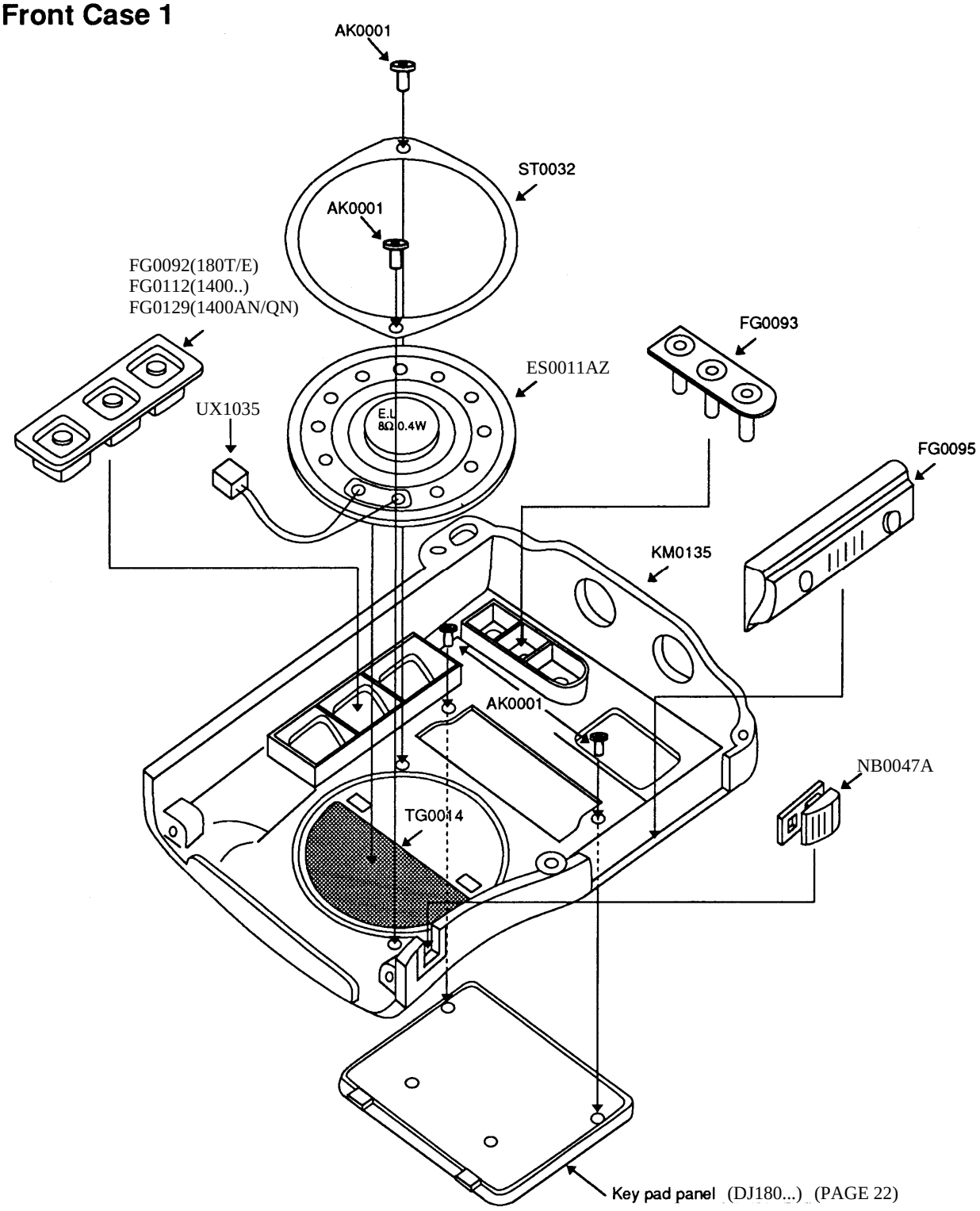

5) Front Case 2

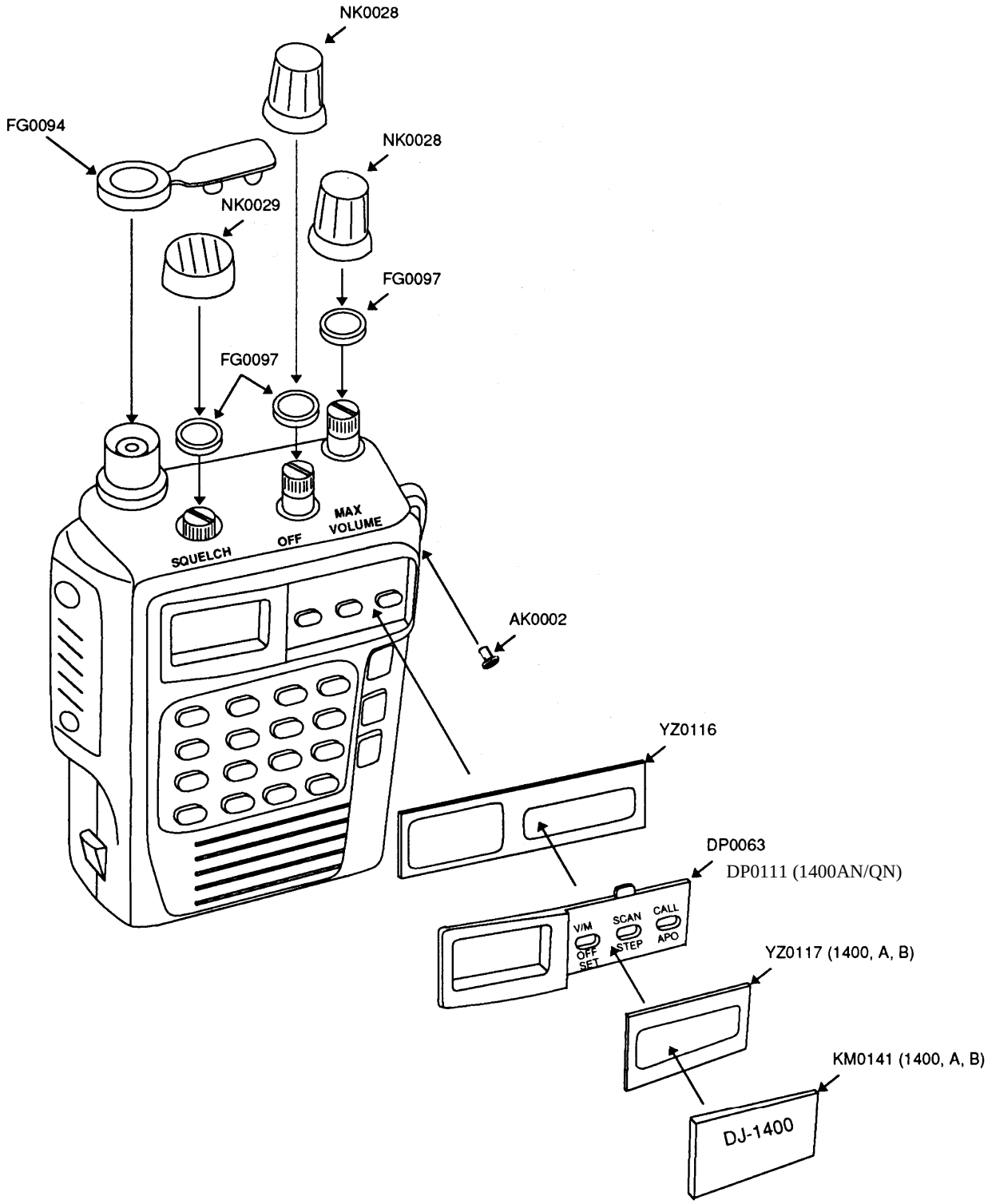

6) Rear Case 3 and Battery Terminal

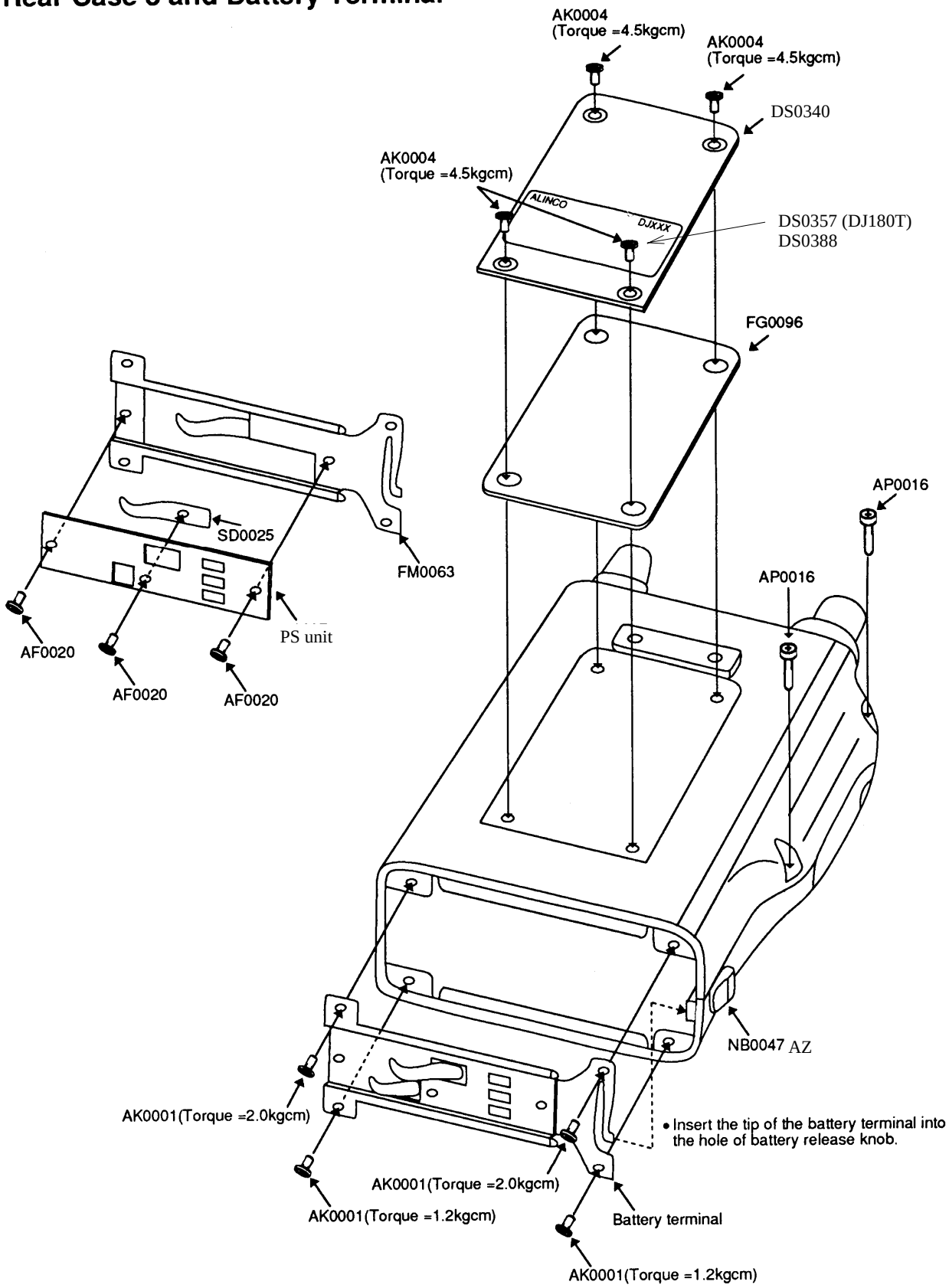

7) Ten Key Cover and Key Pad Panel

Ten Key Cover (180EB, 1400 ...)

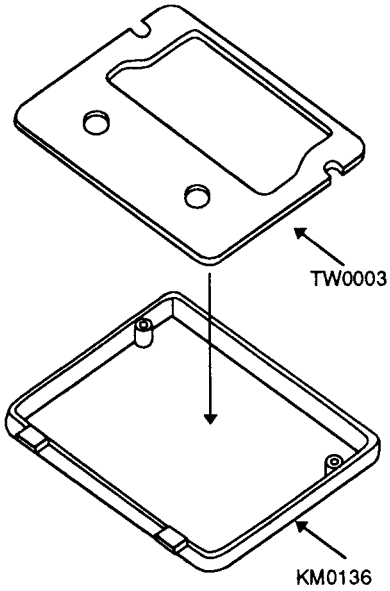

Key Pad Panel

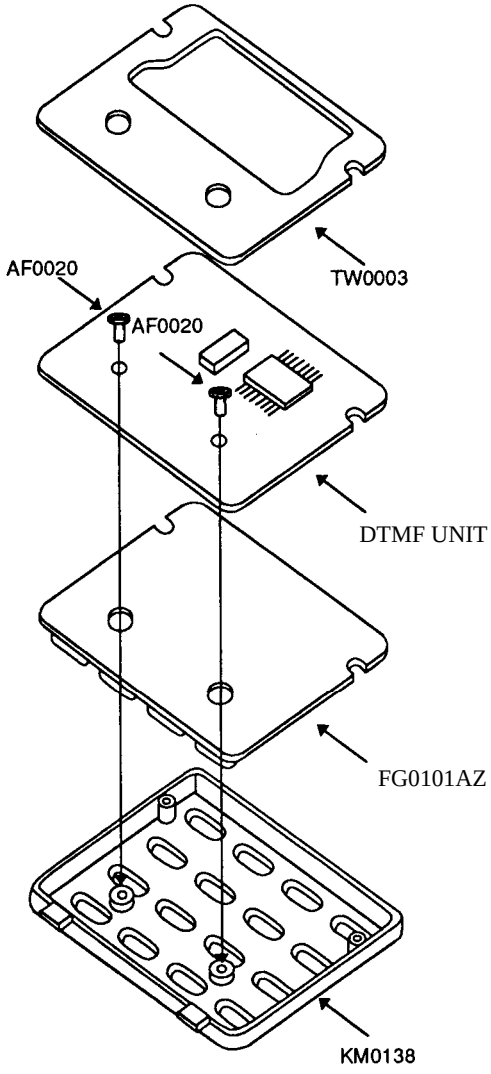

8) CTCSS Unit and ROM1 Unit

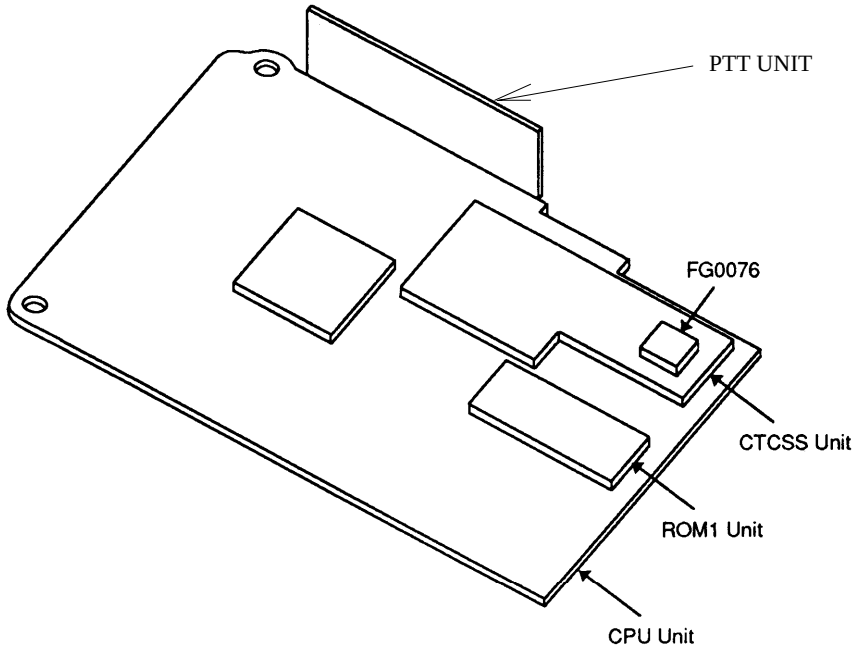

Model No.	DJ-180								DJ-1400				
Destination	T	TA	TB	TS	TZ	E	EA	EB		A	B	AN	QN
CTCSS Unit	1	1	1	1	1	0	0	0	1	1	0	1	1
ROM1 Unit	1	1	1	1	1	1	1	1	1	1	1	1	1

PC BOARD VIEW

1) VCO Unit

Side A

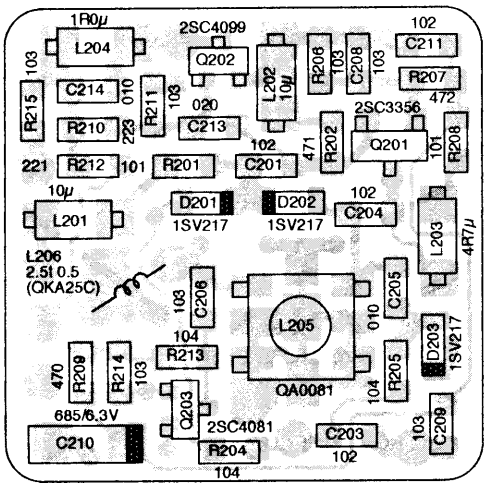

Side B

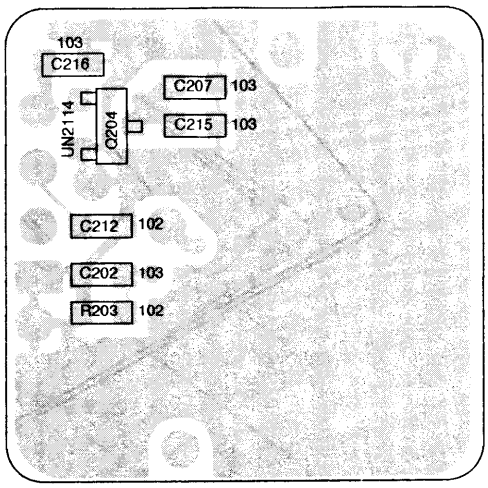

2) Jack Unit

Side A

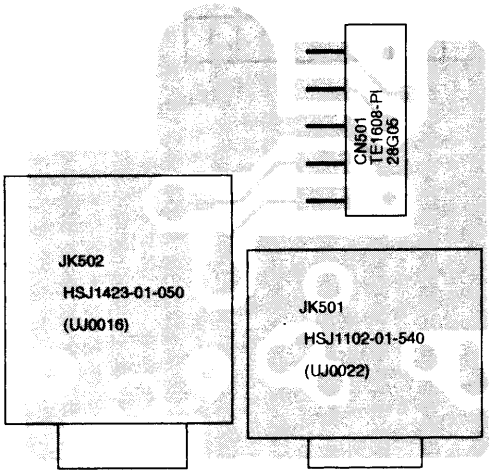

Side B

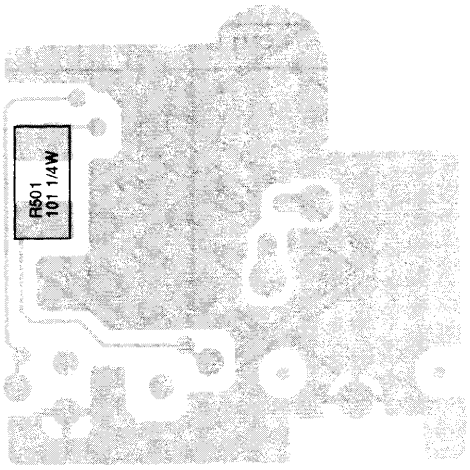

3) PTT Unit Side B

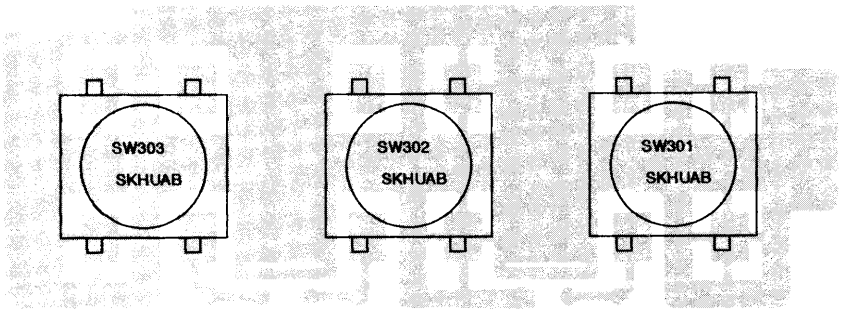

4) PS Unit

Side A UP0220 (1/2)

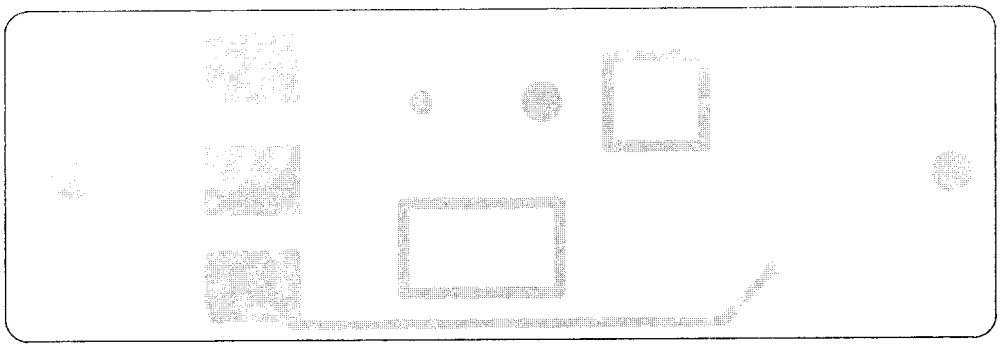

Side B

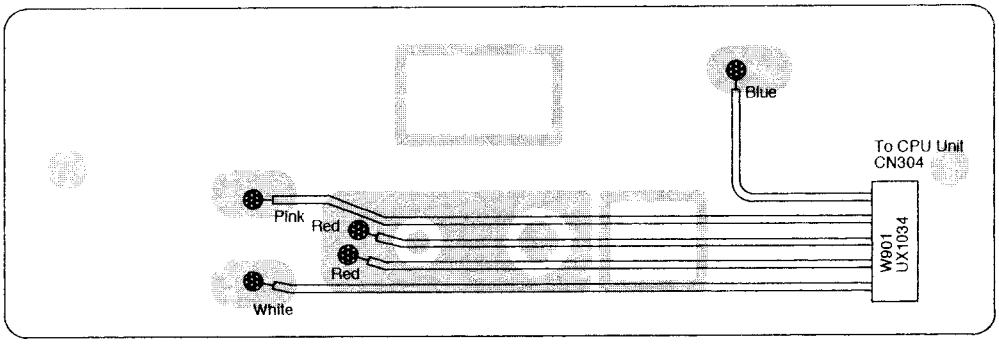

5) ROM1 Unit Side B UP0220 (1/2)

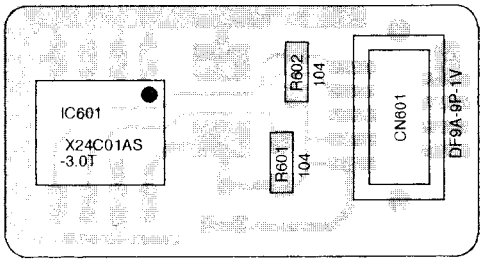

6) ROM2 Unit Side B (EJ-14u / EJ- 15u) UP0220 (1/2)

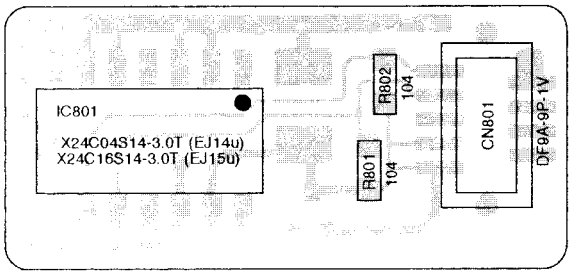

7) RF Unit Side A (UP0221) 1/2

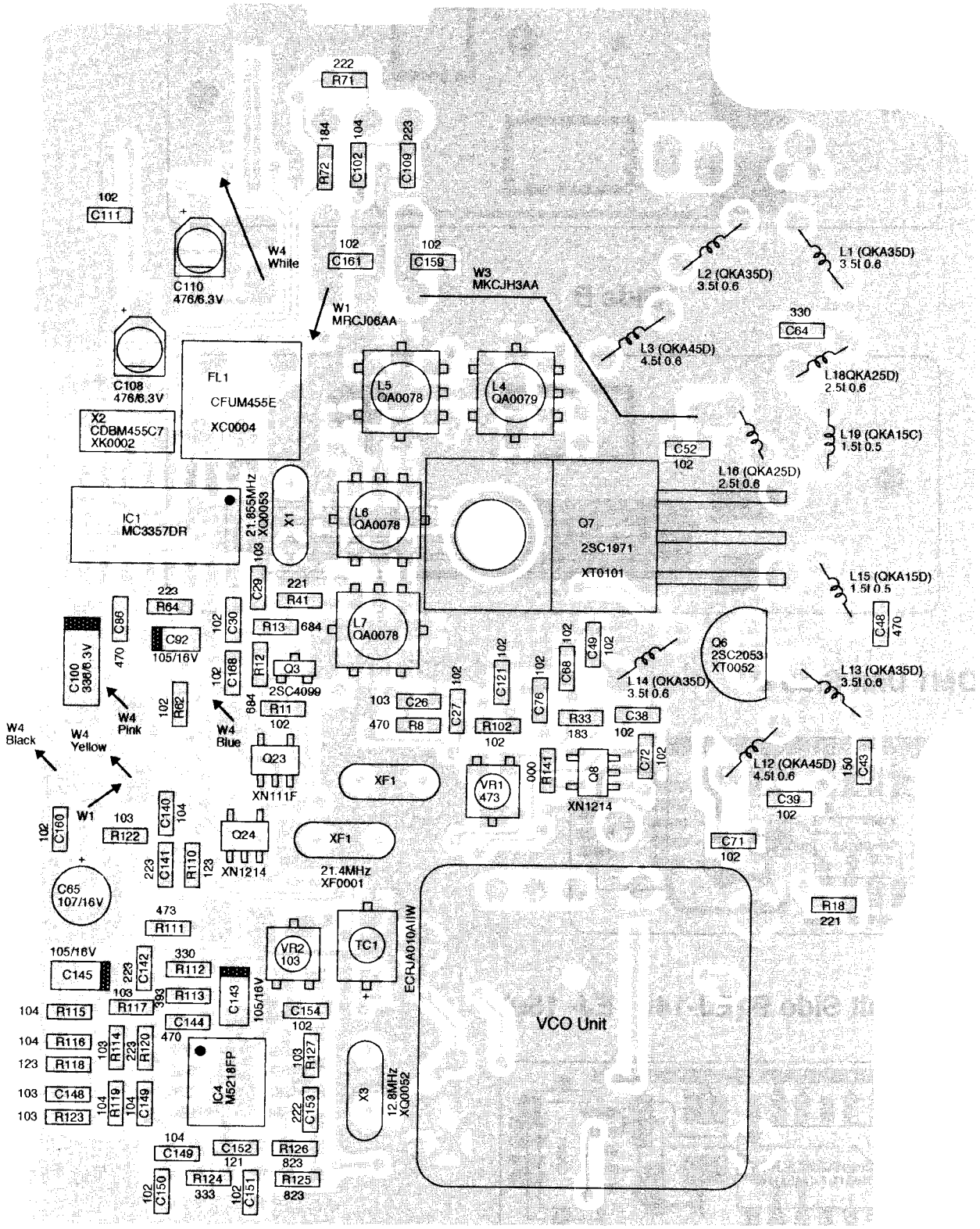

8) RF Unit Side B

UP0221 (1/2)

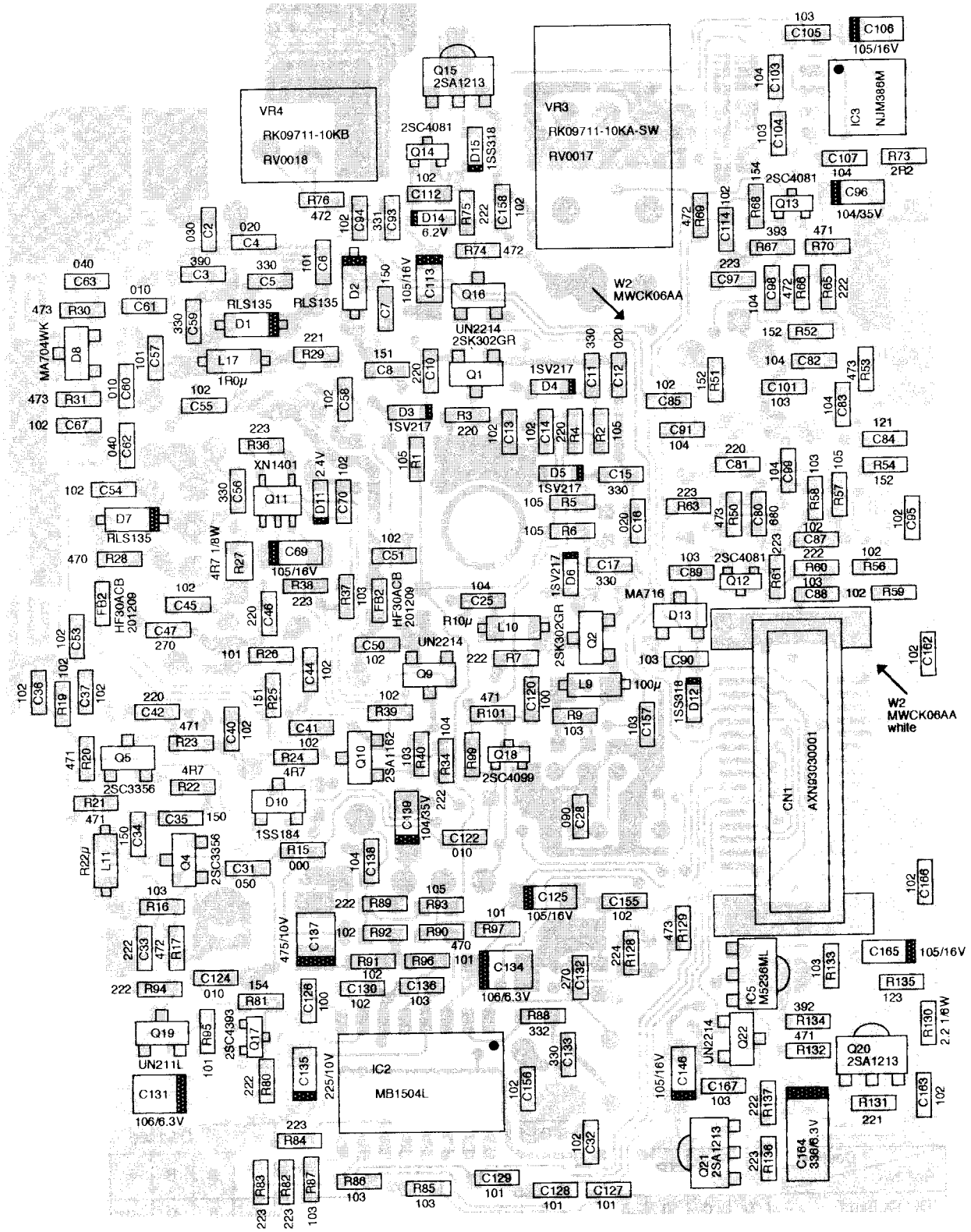

9) CPU Unit Side A UP0220 (1/2)

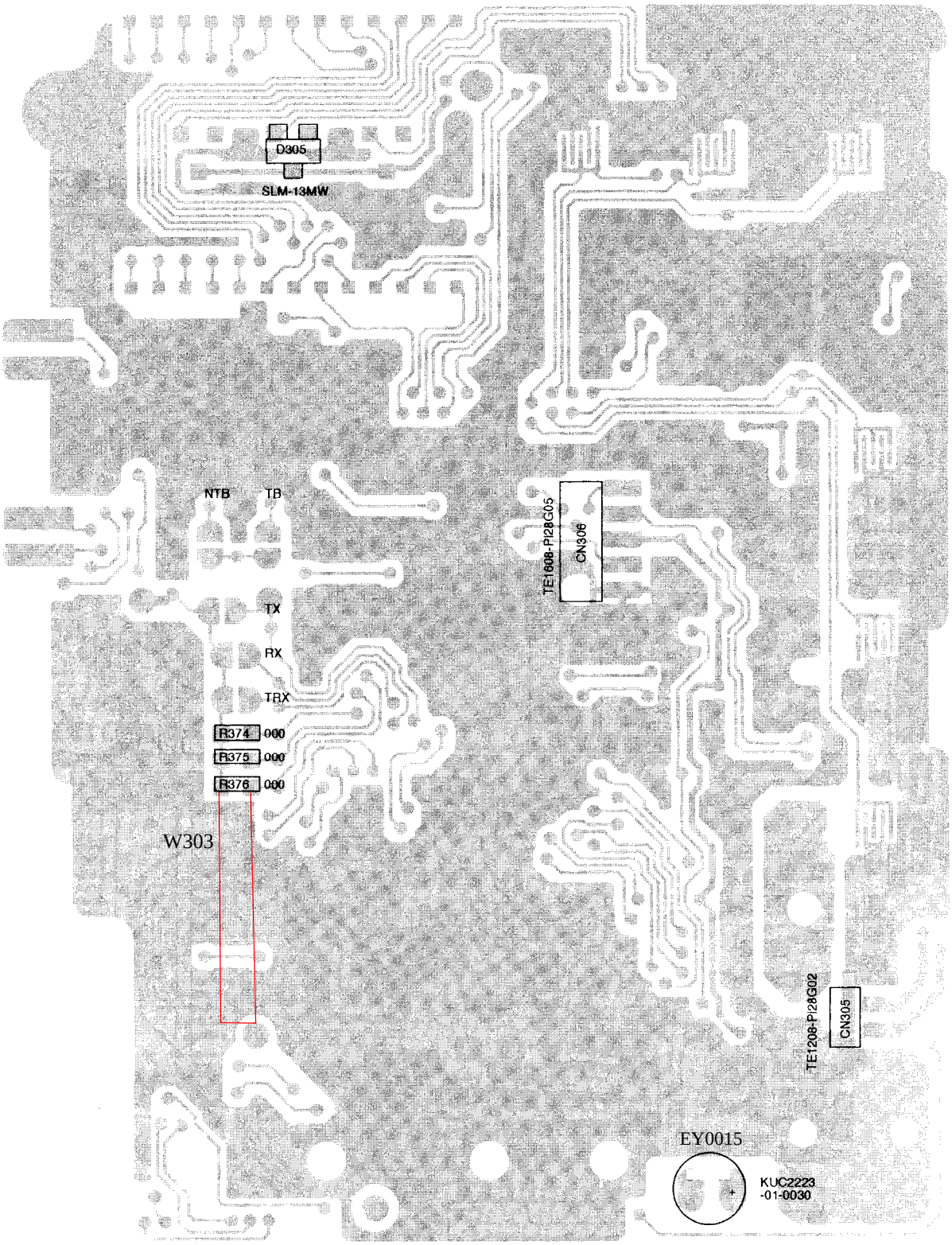

Model No.	DJ-180												DJ-1400							
Destination / Ref. No.	T	TA	TB	TS	TZ	E	EA	EB	TA2	TB2	TM	TSA		A	B	F	G	TM	AN	QN
TX (TX Exp.)	0	0	0	0	0	1	0	0	0	0	0	0	0	0	0	0	0	0	-	-
RX (RX Exp.)	0	0	0	0	0	1	0	0	0	0	0	0	0	0	0	0	0	0	-	-
TRX (TX/RX Exp.)	1	1	1	0	0	0	0	0	1	1	1	0	1	1	1	1	1	1	1	1
R376																			W303	W303

10) CPU Unit Side B UP0220 (1/2)

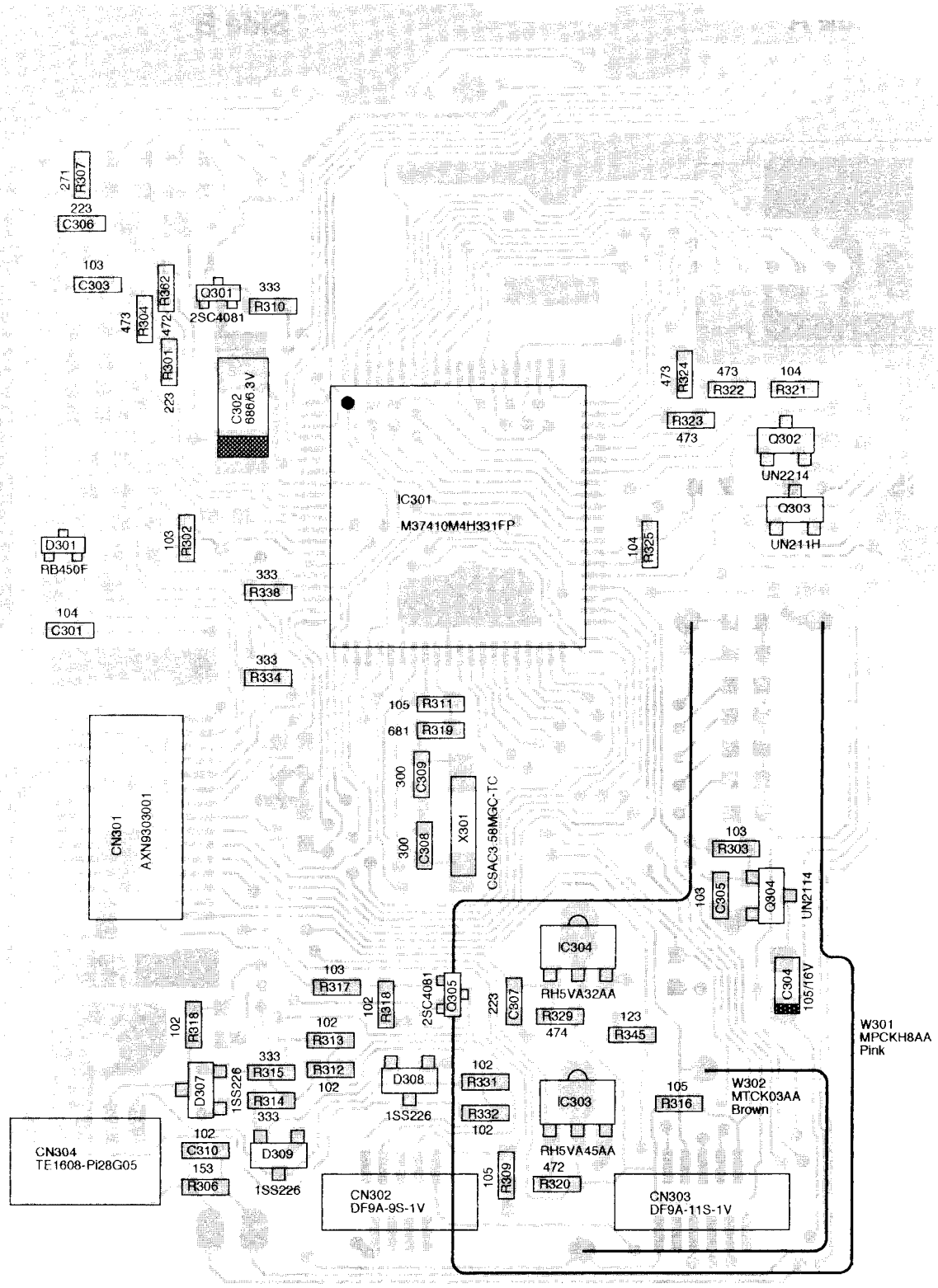

Model No.	DJ-180												DJ-1400							
Destination / Ref.No.	T	TA	TB	TS	TZ	E	EA	EB	TA2	TB2	TM	TSA		A	B	F	G	TM	AN	QN
TB (with Tone Burst)	0	0	0	0	0	1	1	1	0	0	0	0	0	0	0	0	0	0	-	-
NTB (without Tone Burst)	1	1	1	1	1	0	0	0	1	1	1	1	1	1	1	1	1	1	1	1
W301 (Cut when TX is expanded.)	1	0	0	0	0	0	0	0	0	0	1	0	0	0	0	0	0	0	-	-
W302 (Cut when CTCSS is equipped.)	0	0	0	0	0	1	1	1	0	0	0	0	0	0	1	0	1	0	-	-

11) RE Unit

Side A UP0221 (1/2)

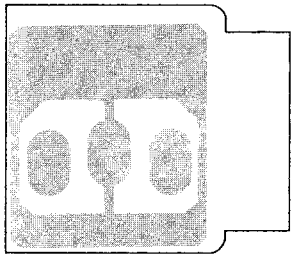

Side B

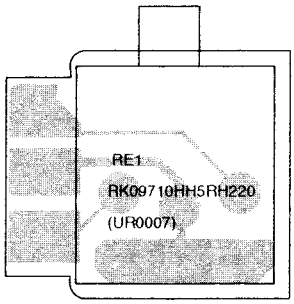

12) CTCSS Unit (EJ-17u)

Side A UP0221 (1/2)

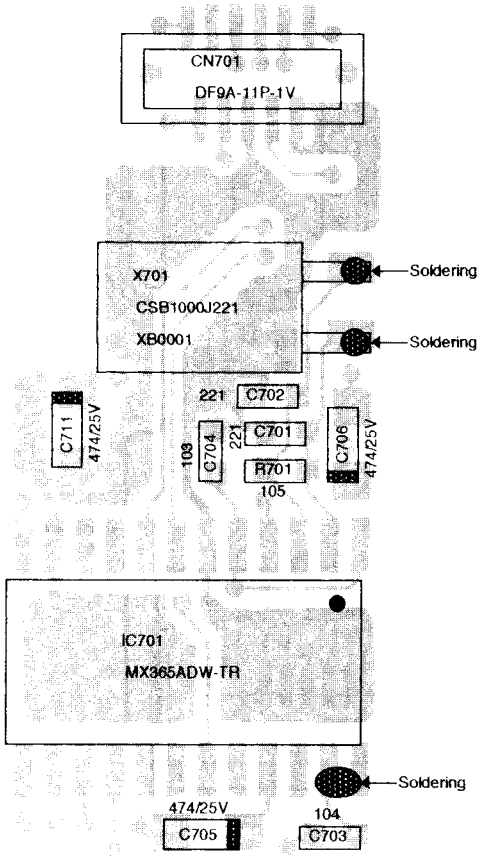

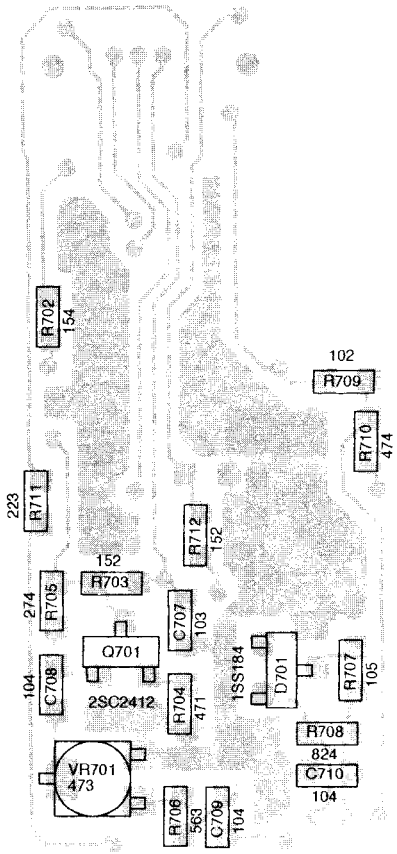

13) DTMF Unit (EJ-13u)

Side A

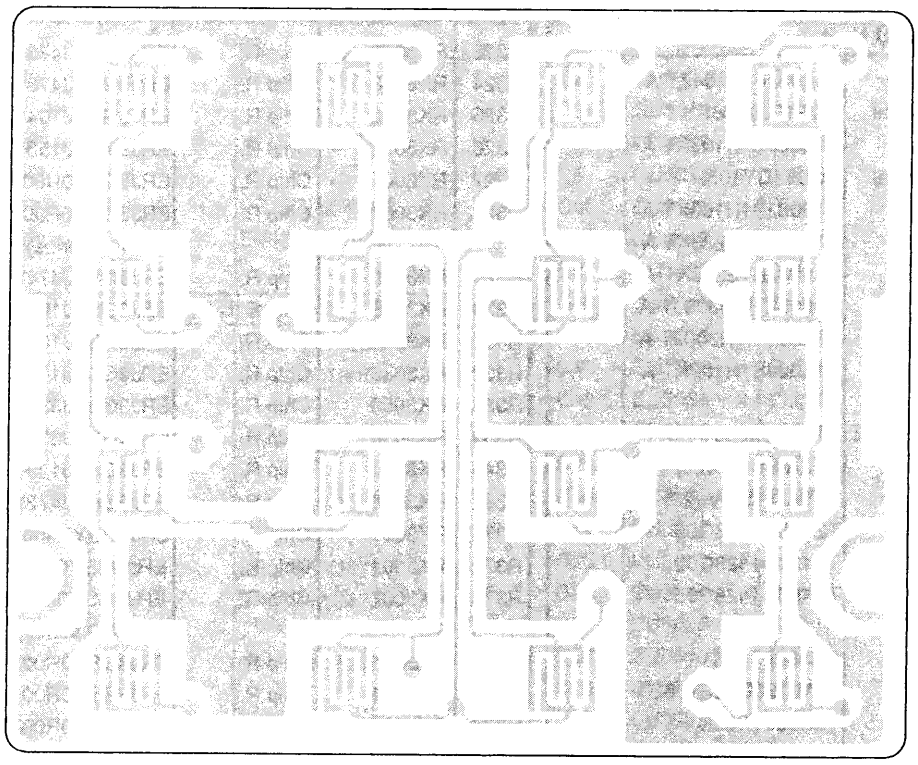

Side B

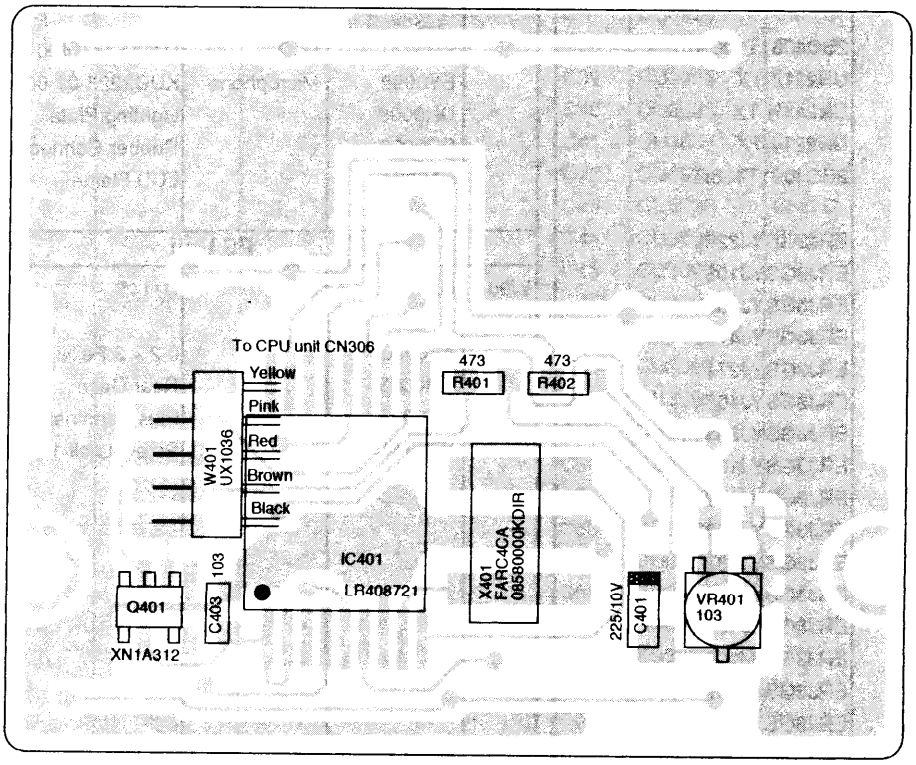

PARTS LIST

CPU Unit PS Unit

Ref No	Parts No.	Description	Parts Name	Ver
		CPU Unit	UP0220 1/2	
C301	CU3059	Chip C.	C1608JF1E104ZT-A	
C302	CS0333	Chip Tantal	ECST0JV686R	
C303	CU3047	Chip C.	C1608JB1H103KT-A	
C304	CS0277	Chip Tantal	ECST1CY105R	
C305	CU3047	Chip C.	C1608JB1H103KT-A	
C306	CU3051	Chip C.	C1608JB1E223KTA	-
C307	CU3051	Chip C.	C1608JB1E223KT-A	
C308	CU3085	Chip C.	C1608CH1H300JT-A	
C309	CU3085	Chip C.	C1608CH1H300JT-A	
C310	CU3035	Chip C.	C1608JB1H102KT-A	
CN301	UE0143	Connector	AXN93030001	
CN302	UE0129	Connector	DF9A-9S-1 V (22)	
CN303	UE0130	Connector	DF9A-11S-1V (22)	
CN304	UE0147	Connector	TE 1608-PI28G05	
CN305	UE0144	Connector	TE 1208-Pl28G02	
CN306	UE0147	Connector	TE 1608-PI28G05	
D301	XD0134	Diode	RB450FT106	
D302	XD0057	Diode	1SS184	
D305	XL0016	LED	SLM-1 3MWSFT96B	
D307	XD0103	Diode	1SS226TE85L	
D308	XD0103	Diode	1SS226TE85L	
D309	XD0103	Diode	1SS226TE85L	
IC301	XA0222	IC	M37410M4H331 FP	
IC301	XA0508	IC	M37410M4H332 FP	AN/QN
IC303	XA0208	IC	RH5VA45AA-T 1	
IC304	XA0198	IC	R H 5VA32AA-T 1	
Q301	XT0095	Trangistor	2SC4081T106R	
Q302	XU0038	Trangistor	UN2214-TX	
Q303	XU0040	Trangistor	UN211H-TX	
Q304	XU0038	Trangistor	UN2214-TX	
Q305	XT0095	Trangistor	2SC4081T106R	
R301	RK3054	Chip R.	ERJ3GSYJ223V	
R302	RK3050	Chip R.	ERJ3GSYJ103V	
R303	RK3052	Chip R.	ERJ3GSYJ153V	
R303	RK3055	Chip R.	ERJ3GSYJ273V	AN/QN
R304	RK3058	Chip R.	ERJ3GSYJ473V	
R307	RK3031	Chip R.	ERJ3GSYJ271V	
R309	RK3074	Chip R.	ERJ3GSYJ105V	
R310	RK3056	Chip R.	ERJ3GSYJ333V	
R311	RK3074	Chip R.	ERJ3GSYJ105V	
R312	RK3038	Chip R.	ERJ3GSYJ102V	
R313	RK3038	Chip R.	ERJ3GSYJ102V	
R314	RK3056	Chip R.	ERJ3GSYJ333V	
R315	RK3056	Chip R.	ERJ3GSYJ333V	
R316	RK3074	Chip R.	ERJ3GSYJ105V	
R317	RK3050	Chip R.	ERJ3GSYJ103V	
R318	RK3038	Chip R.	ERJ3GSYJ102V	
R319	RK3036	Chip R.	ERJ3GSYJ681V	
R320	RK3046	Chip R.	ERJ3GSYJ472V	
R321	RK3062	Chip R.	ERJ3GSYJ104V	
R322	RK3058	Chip R.	ERJ3GSYJ473V	

Ref No	Parts No.	Description	Parts Name	Ver
R323	RK3058	Chip R.	ERJ3GSYJ473V	
R324	RK3058	Chip R.	ERJ3GSYJ473V	
R325	RK3062	Chip R.	ERJ3GSYJ104V	
R326	RK3052	Chip R.	ERJ3GSYJ153V	
R327				E
R328				T/1400
R329	RK3070	Chip R.	ERJ3GSYJ474V	
R330	RK3038	Chip R.	ERJ3GSYJ102V	
R331	RK3038	Chip R.	ERJ3GSYJ102V	
R332	RK3038	Chip R.	ERJ3GSYJ102V	
R334	RK3052	Chip R.	ERJ3GSYJ153V	
R338	RK3056	Chip R.	ERJ3GSYJ333V	
R345	RK3051	Chip R.	ERJ3GSYJ123V	
R362	RK3046	Chip R.	ERJ3GSYJ472V	
R371	-			E
R372	-			E
R373	-			T/1400
R374	RK3001	Chip R.	ERJ3GSY0R00V	
R375	RK3001	Chip R.	ERJ3GSY0R00V	
R376	RK3001	Chip R.	ERJ3GSY0R00V	
X301	XB0008	Crystal	CSAC3.58MGC-TC	
W301	MPCKH8AA	Wire	DJ-180 J301 (T series)	T
W302	MTCK03AA	Wire	DJ-180 J302 (E series)	E
W303	MPCK03AA	Wire	DJ-180 J302 (1400 series	1400
	EL0020A	LCD	DJ145 (E/1400 series)	
	EY0015	Microphone	KUC2223-01 -0030	
	FF0022		Cloth(BLIND LCD)	
	DH0008		Lighting plate	
	FG0099		Rubber Connector	
	ST0031		LCD Flame	

		PS Unit	UP0220 1/2	
W901	UX1034	Wire	DJ145	
	AF0020		02+3FeNi	
	FM0063		Rear Case	
	SD0025		Plus Terminal	
	YZ0044		Screw Lock 1401C	

Ref No	Parts No.	Description	Parts Name	Ver
		ROM1 Unit	UP0220 1/2	all
CN601	UE0132	Connector	DF9A-9P-1V	
IC601	XA0363	IC	AT24C01A-10SI-2.7	
R601	RK3062	Chip R.	ERJ3GSYJ104V	
R602	RK3062	Chip R.	ERJ3GSYJ104V	
		DTMF Unit	UP0220 1/2	
C401	CS0256	Chip Tantal	ECST1AY225R	DJ180
C403	CU3047	Chip C.	C1608JB1H103KT-A	DJ180
IC401	XA0042	IC	LR408721	DJ180
Q401	XU0041	Digital T.	XN1A312-TX	DJ180
R401	RK3058	Chip R.	ERJ3GSYJ473V	DJ180
R402	RK3058	Chip R.	ERJ3GSYJ473V	DJ180
VR401	RH0103	Trim.Pot	EVM1YSX50B14	DJ180
W401	UX1036	Wire	DJ-145N	DJ180
X401	XB0001	Crystal	FARC4CAO3580000KO 1 R	DJ180
	AF0020		02+3FeNi	DJ180
	FG0101AZ		SiliconTenKey	DJ180
	KM0138		Keypad Panel	DJ180
	TW0003		Water Proof Cushion	
	KM0136		Keypad Panel	1400

Ref No	Parts No.	Description	Parts Name	Ver
		RF Unit	UP0221	
C2	CU3004	Chip C.	C1608CH1H030CT-A	
C3	CU3018	Chip C.	C1608CH1H390JT-A	
C4	CU3003	Chip C.	C1608CH1H020CT-A	
C5	CU3017	Chip C.	C1608CH1H330JT-A	
C6	CU3023	Chip C.	C1608CH1H101JT-A	
C7	CU3013	Chip C.	C1608CH1H150JT-A	
C8	CU3025	Chip C.	C1608CH1H151JT-A	
C10	CU3015	Chip C.	C1608CH1H220JT-A	
C11	CU3017	Chip C.	C1608CH1H330JT-A	
C12	CU3003	Chip C.	C1608CH1H020CT-A	
C13	CU3035	Chip C.	C1608JB1H102KT-A	
C14	CU3035	Chip C.	C1608JB1H102KT-A	
C15	CU3017	Chip C.	C1608CH1H330JT-A	
C16	CU3003	Chip C.	C1608CH1H020CT-A	
C17	CU3017	Chip C.	C1608CH1H330JT-A	
C25	CU3059	Chip C.	C1608JF1E104ZT-A	
C26	CU3047	Chip C.	C1608JB1H103KT-A	
C27	CU3035	Chip C.	C1608JB1H102KT-A	
C28	CU3004	Chip C.	C1608CH1H030CT-A	Wide
C28	CU3011	Chip C.	C1608CH1H100DT-A	Narrow
C29	CU3047	Chip C.	C1608JB1H103KT-A	
C30	CU3035	Chip C.	C1608JB1H102KT-A	
C31	CU3006	Chip C.	C1608CH1H050CT-A	
C32	CU3035	Chip C.	C1608JB1H102KT-A	
C33	CU3035	Chip C.	C1608JB1H102KT-A	
C34	CU3013	Chip C.	C1608CH1H150JT-A	
C35	CU3013	Chip C.	C1608CH1H150JT-A	
C36	CU3035	Chip C.	C1608JB1H102KT-A	
C37	CU3035	Chip C.	C1608JB1H102KT-A	
C38	CU3035	Chip C.	C1608JB1H102KT-A	
C39	CU3035	Chip C.	C1608JB1H102KT-A	
C40	CU3035	Chip C.	C1608JB1H102KT-A	
C41	CU3035	Chip C.	C1608JB1H102KT-A	
C42	CU3015	Chip C.	C1608CH1H220JT-A	
C43	CU3013	Chip C.	C1608CH1H150JT-A	
C44	CU3035	Chip C.	C1608JB1H102KT-A	
C45	CU3035	Chip C.	C1608JB1H102KT-A	
C46	CU3015	Chip C.	C1608CH1H220JT-A	
C46	CU3013	Chip C.	C1608CH1H150JT-A	QN/TA 2/TB2
C47	CU3016	Chip C.	C1608CH1H270JT-A	
C48	CU3019	Chip C.	C1608CH1H470JT-A	
C48	CU3018	Chip C.	C1608CH1H390JT-A	QN/TA 2/TB2
C49	CU3035	Chip C.	C1608CH1H102KT-A	
C50	CU3035	Chip C.	C1608JB1H102KT-A	
C51	CU3035	Chip C.	C1608JB1H102KT-A	
C52	CU3035	Chip C.	C1608JB1H102KT-A	
C53	CU3035	Chip C.	C1608JB1H102KT-A	
C54	CU3035	Chip C.	C1608JB1H102KT-A	
C55	CU3035	Chip C.	C1608JB1H102KT-A	
C56	CU3017	Chip C.	C1608CH1H330JT-A	
C56	CU3016	Chip C.	C1608CH1H270JT-A	QN/TA 2/TB2
C57	CU3023	Chip C.	C1608CH1H101JT-A	
C58	CU3035	Chip C.	C1608JB1H102KT-A	
C59	CU3017	Chip C.	C1608CH1H330JT-A	
C59	CU3016	Chip C.	C1608CH1H270JT-A	QN/TA 2/TB2
C60	CU3002	Chip C.	C1608CH1H010CT-A	
C61	CU3002	Chip C.	C1608CH1H010CT-A	
C62	CU3005	Chip C.	C1608CH1H040CT-A	

Ref No	Parts No.	Description	Parts Name	Ver
C63	CU3005	Chip C.	C1608CH1H040CT-A	
C64	CU3017	Chip C.	C1608CH1H330JT-A	
C65	CE0204	Chip Tantal	ECEA1CKA107	
C67	CU3035	Chip C.	C1608JB1H102KT-A	
C68	CU3035	Chip C.	C1608JB1H102KT-A	
C69	CS0277	Chip Tantal	ECST1CY105R	
C70	CU3035	Chip C.	C1608JB1H102KT-A	
C71	CU3035	Chip C.	C1608JB1H102KT-A	
C72	CU3035	Chip C.	C1608JB1H102KT-A	
C75	CU3059	Chip C.	C1608JF1E104ZT-4	
C76	CU3035	Chip C.	C1608JB1H102KT-A	
C80	CU3021	Chip C.	C1608CH1H680JT-A	
C81	CU3015	Chip C.	C1608CH1H220JT-A	
C82	CU3059	Chip C.	C1608JF1E104ZT-4	
C83	CU3059	Chip C.	C1608JF1E104ZT-4	
C84	CU3024	Chip C.	C1608CH1H121JT-A	
C85	CU3035	Chip C.	C1608JB1H102KT-A	
C86	CU3019	Chip C.	C1608CH1H470JT-A	
C87	CU3035	Chip C.	C1608JB1H102KT-A	
C88	CU3047	Chip C.	C1608JB1H103KT-A	
C89	CU3047	Chip C.	C1608JB1H103KT-A	
C90	CU3047	Chip C.	C1608JB1H103KT-A	
C91	CU3059	Chip C.	C1608JF1E104ZT-4	
C92	CS0277	Chip Tantal	ECST1CY105R	
C93	CU3029	Chip C.	C1608JB1H331KT-A	
C94	CU3035	Chip C.	C1608JB1H102KT-A	
C95	CU3035	Chip C.	C1608JB1H102KT-A	
C96	CS0307	Chip Tantal	ECST1VY104R	
C97	CU3051	Chip C.	C1608JB1E223KT-A	
C98	CU3059	Chip C.	C1608JF1E104ZT-4	
C99	CU3059	Chip C.	C1608JF1E104ZT-4	
C100	CS0331	Chip Tantal	ECST0JC336R	
C101	CU3047	Chip C.	C1608JB1H103KT-A	
C102	CU3059	Chip C.	C1608JF1E104ZT-A	
C103	CU3059	Chip C.	C1608JF1E104ZT-4	
C104	CU3047	Chip C.	C1608JB1H103KT-A	
C105	CU3039	Chip C.	C1608JB1H222KT-A	
C106	CS0277	Chip Tantal	ECST1CY105R	
C107	CU3059	Chip C.	C1608JF1E104ZT-4	
C108	CE0307	Chip Tantal	ECEV0JA476P	
C109	CU3051	Chip C.	C1608JB1E223KT-A	
C110	CE0307	Chip Tantal	ECEV0JA476P	
C111	CU3035	Chip C.	C1608JB1H102KT-A	
C112	CU3035	Chip C.	C1608JB1H102KT-A	
C113	CS0277	Chip Tantal	ECST1CY105R	
C114	CU3035	Chip C.	C1608JB1H102KT-A	
C120	CS3011	Chip Tantal	C1608CH1H100DTA	
C121	CU3035	Chip C.	C1608JB1H102KT-A	
C122	CU3002	Chip C.	C1608CH1H010CT-A	
C124	CU3CN)2	Chip C.	C1608CH1H010CT-A	
C125	CS0277	Chip Tantal	ECST1CY105R	
C126	CU3011	Chip C.	C1608CH1H100DT-A	
C127	CU3023	Chip C.	C1608CH1H101JT-A	
C128	CU3023	Chip C.	C1608CH1H101JT-A	

Ref No	Parts No.	Description	Parts Name	Ver
C129	CU3023	Chip C.	C1608CH1H101JT-A	
C130	CU3035	Chip C.	C1608JB1H102KT-A	
C131	CS0329	Chip Tantal	ECS0JX106R	
C132	CU3016	Chip C.	C1608CH1H270JT-A	
C133	CU3017	Chip C.	C1608CH1H330JT-A	
C134	CS0329	Chip Tantal	ECS0JX106R	
C135	CS0256	Chip Tantal	ECS1AY225R	
C136	CU3047	Chip C.	C1608JB1H103KT-A	
C137	CS0258	Chip Tantal	ECST1AX475R	
C138	CU3047	Chip C.	C1608JF1E104ZT-4	
C139	CS0307	Chip Tantal	ECST1VY104R	
C140	CU3059	Chip C.	C1608JF1E104ZTA	
C141	CU3051	Chip C.	C1608JB1E223KT-A	
C142	CU3051	Chip C.	C1608JB1E223KT-A	
C143	CS0277	Chip Tantal	ECST1CY105R	
C144	CU3019	Chip C.	C1608CH1H470JT-A	
C145	CS0277	Chip Tantal	ECST1CY105R	
C146	CS0277	Chip Tantal	ECST1CY105R	
C147	CU3059	Chip C.	C1608JF1E104ZTA	
C148	CU3047	Chip C.	C1608JB1H103KT-A	
C149	CU3059	Chip C.	C1608JF1E104ZT-A	
C150	CU3035	Chip C.	C1608JB1H102KT-A	
C151	CU3035	Chip C.	C1608JB1H102KT-A	
C152	CU3024	Chip C.	C1608CH1H121JT-A	
C153	CU3039	Chip C.	C1608JB1H222KT-A	
C154	CU3035	Chip C.	C1608JB1H102KT-A	
C155	CU3035	Chip C.	C1608JB1H102KT-A	
C156	CU3035	Chip C.	C1608JB1H102KT-A	
C157	CU3047	Chip C.	C1608JB1H103KT-A	
C158	CU3035	Chip C.	C1608JB1H102KT-A	
C159	CU3035	Chip C.	C1608JB1H102KTA	
C160	CU3035	Chip C.	C1608JB1H102KT-A	
C161	CU3035	Chip C.	C1608JB1H102KT-A	
C162	CU3035	Chip C.	C1608JB1H102KT-A	
C163	CU3035	Chip C.	C1608JB1H102KT-A	
C164	CS0331	Chip Tantal	ECST0JC336R	
C165	CS0277	Chip Tantal	ECST1CY105R	
C166	CU3035	Chip C.	C1608JB1H102KT-A	
C167	CU3047	Chip C.	C1608JB1H103KT-A	
C168	CU3035	Chip C.	C1608JB1H102KT-A	
CN1	UE0143	Connector	AXN93030001	
D1	XD0066	Diode	RLS135-TE-11	
D2	XD0066	Diode	RLS135-TE-11	
D3	XD0233	Diode	1SV217TPH4	
D4	XD0233	Diode	1SV217TPH4	
D5	XD0233	Diode	1SV217TPH4	
D6	XD0233	Diode	1SV217TPH4	
D7	XD0066	Diode	RLS135-TE-11	
D8	XD0120	Diode	MA704WKTX	
D10	XD0057	Diode	1SS184TE85L	
D11	XD0147	Diode	DTZ2.4ATT11	
D12	XD0129	Diode	1SS318TT11	

Ref No	Parts No.	Description	Parts Name	Ver
D13	XD0118	Diode	MA716-TW	
D14	XD0137	Diode	DTZ6.2ATT11	
D15	XD0272	Diode	1SS356 TW11	
FB1	QB0008	Ferrite Bead	HF30ACB201 209-T	
FB2	QB0008	Ferrite Bead	HF30ACB201 209-T	
FL1	XC0004	Fitter	CFUM455E	Wide
FL1	XC0006	Fitter	CFUM455G	Narrow
IC1	XA0063	IC	MC3357DR	
IC2	XA0145	IC	MB1504LPF-G-BND-TF	
IC3	XA0061	IC	NJM386M.T1	
IC4	XA0068	IC	M5218FP-TO1-1	
IC5	XA0104	IC	M5236 M L-T73A-36	
L1	QKA35D	Coil	MR3.0-3.5T-0.6	
L2	QKA35D	Coil	MR3.0-3.5T-0.6	
L3	QKA45D	Coil	MR3.0-4.5T-0.6	
L4	QA0079	RF Coil	QA0079	
L5	QA0078	RF Coil	QA0078	
L6	QA0078	RF Coil	QA0078	
L7	QA0078	RF Coil	QA0078	
L9	QC0010	Chip L.	MLF3216E100M	
L10	QC0009	Chip L.	MLF3216DR10M	
L11	QC0139	Chip L.	MLF3216DR22M	
L12	QKA45D	Coil	MR3.0-4.5T-0.6	
L13	QKA35D	Coil	MR3.0-3.5T-0.6	
L14	QKA35D	Coil	MR3.0-3.5T-0.6	
L15	QKA15D	Coil	MR3.0-1.5T-0.6	
L16	QKA25D	Coil	MR3.0-2.5T-0.6	
L17	QC0003	Chip L.	MLF3216A1R0M	
L18	QKA25D	Coil	MR3.0-2.5T-0.6	
L19	QKA15C	Coil	MR2.5-1.5T-0.5	
L19	QKA15B	Coil	MR2.0 1.5T 0.5	QN
Q1	XE0009	FET	2SK302-GR(TE85L)	
Q2	XE0009	FET	2SK302-GR(TE85L)	
Q3	XT0096	Transistor	2SC4099T1 06N	
Q4	XT0030	Transistor	2SC3356T1BR24/25	
Q5	XT0030	Transistor	2SC3356T1BR24/25	
Q6	XT0052	Transistor	2SC2053	
Q7	XT0101	Transistor	2SC1971	
Q8	XU0035	Transistor	XN1214-TX	
Q9	XU0037	Transistor	UN2215-TX	
Q10	XT0068	Transistor	2SA1162GRTE85L	
Q11	XU0034	Transistor	XN1401-TX	
Q12	XT0095	Transistor	2SC4081T106R	
Q13	XT0095	Transistor	2SC4081T106R	
Q14	XT0095	Transistor	2SC4081T106R	
Q15	XT0088	Transistor	2SA1213YTE12L	
Q16	XU0038	Transistor	UN2214TX	
Q17	XT0097	Transistor	2SC4393TE85R	
Q18	XT0096	Transistor	2SC4099T1 06N	
Q19	XU0039	Transistor	UN211L-TX	
Q20	XT0088	Transistor	2SA1213YTE12L	

Ref No	Parts No.	Description	Parts Name	Ver
Q21	XT0088	Transistor	2SA1213YTE12L	
Q22	XU0038	Transistor	UN2214-TX	
Q23	XU0036	Transistor	XN111F-TX	
Q24	XU0035	Transistor	XN1214-TX	
R1	RK3074	Chip R.	ERJ3G3YJ105V	
R2	RK3074	Chip R.	ERJ3G3YJ105V	
R3	RK3018	Chip R.	ERJ3GSYJ220V	
R4	RK3018	Chip R.	ERJ3GSYJ220V	
R5	RK3074	Chip R.	ERJ3G3YJ105V	
R6	RK3074	Chip R.	ERJ3G3YJ105V	
R7	RK3042	Chip R.	ERJ3GSYJ222V	
R8	RK3022	Chip R.	ERJ3GSYJ470V	
R9	RK3050	Chip R.	ERJ3GSYJ103V	
R11	RK3038	Chip R.	ERJ3GSYJ102V	wide
R11	RK3037	Chip R.	ERJ3GSYJ821V	narrow
R12	RK3072	Chip R.	ERJ3GSYJ684V	
R13	RK3038	Chip R.	ERJ3GSYJ102V	
R15	RK3001	Chip R.	ERJ3GSY0R00V	
R16	RK3050	Chip R.	ERJ3GSYJ103V	
R17	RK3046	Chip R.	ERJ3GSYJ472V	
R18	RK3030	Chip R.	ERJ3GSYJ221V	
R19	RK3038	Chip R.	ERJ3GSYJ102V	
R20	RK3034	Chip R.	ERJ3GSYJ471V	
R21	RK3034	Chip R.	ERJ3GSYJ471V	
R22	RK3010	Chip R.	ERJ3GSYJ4R7V	
R23	RK3034	Chip R.	ERJ3GSYJ471V	
R24	RK3010	Chip R.	ERJ3GSYJ4R7V	
R25	RK3028	Chip R.	ERJ3GSYJ151V	
R26	RK3026	Chip R.	ERJ3GSYJ101V	
R27	RK1108	Chip R.	ERJ8GEYJ4R7V	
R28	RK3022	Chip R.	ERJ3GSYJ470V	
R29	RK0022	Chip R.	ERJ6GEYJ221V	
R30	RK3058	Chip R.	ERJ3GSYJ473V	
R31	RK3058	Chip R.	ERJ3GSYJ473V	
R33	RK3053	Chip R.	ERJ3GSYJ183V	
R34	RK3042	Chip R.	ERJ3GSYJ222V	
R36	RK3054	Chip R.	ERJ3GSYJ223V	
R37	RK3050	Chip R.	ERJ3GSYJ103V	
R38	RK3054	Chip R.	ERJ3GSYJ223V	
R39	RK3038	Chip R.	ERJ3GSYJ102V	
R40	RK3050	Chip R.	ERJ3GSYJ103V	
R41	RK3030	Chip R.	ERJ3GSYJ221V	
R50	RK3058	Chip R.	ERJ3GSYJ473V	
R51	RK3040	Chip R.	ERJ3GSYJ152V	
R52	RK3040	Chip R.	ERJ3GSYJ152V	
R53	RK3058	Chip R.	ERJ3GSYJ473V	
R54	RK3040	Chip R.	ERJ3GSYJ152V	
R56	RK3038	Chip R.	ERJ3GSYJ102V	
R57	RK3074	Chip R.	ERJ3G3YJ105V	
R58	RK3050	Chip R.	ERJ3GSYJ103V	
R59	RK3038	Chip R.	ERJ3GSYJ102V	
R60	RK3042	Chip R.	ERJ3GSYJ222V	
R61	RK3054	Chip R.	ERJ3GSYJ223V	
R62	RK3038	Chip R.	ERJ3GSYJ102V	

RF Unit

Ref No	Parts No.	Description	Parts Name	Ver
R63	RK3054	Chip R.	ERJ3GSYJ223V	
R64	RK3054	Chip R.	ERJ3GSYJ223V	
R65	RK3042	Chip R.	ERJ3GSYJ222V	
R66	RK3046	Chip R.	ERJ3GSYJ472V	
R67	RK3058	Chip R.	ERJ3GSYJ473V	
R68	RK3064	Chip R.	ERJ3GSYJ154V	
R69	RK3046	Chip R.	ERJ3GSYJ472V	
R70	RK3034	Chip R.	ERJ3GSYJ471V	Wide
R70	RK3034	Chip R.	ERJ3GSYJ471V	Narrow
R71	RK3042	Chip R.	ERJ3GSYJ222V	
R72	RK3065	Chip R.	ERJ3GSYJ184V	Wide
C182 (R72)	CU3059	Chip C.	C1608JF1E104ZT-N	Narrow
R73	RK3006	Chip R.	ERJ3GSYJ2R2V	
R74	RK3046	Chip R.	ERJ3GSYJ472V	
R75	RK3042	Chip R.	ERJ3GSYJ222V	
R76	RK3046	Chip R.	ERJ3GSYJ472V	
R80	RK3042	Chip R.	ERJ3GSYJ222V	
R81	RK3064	Chip R.	ERJ3GSYJ154V	
R82	RK3054	Chip R.	ERJ3GSYJ223V	
R83	RK3054	Chip R.	ERJ3GSYJ223V	
R84	RK3054	Chip R.	ERJ3GSYJ223V	
R85	RK3050	Chip R.	ERJ3GSYJ103V	
R86	RK3050	Chip R.	ERJ3GSYJ103V	
R87	RK3050	Chip R.	ERJ3GSYJ103V	
R88	RK3044	Chip R.	ERJ3GSYJ332V	
R89	RK3042	Chip R.	ERJ3GSYJ222V	
R90	RK3022	Chip R.	ERJ3GSYJ470V	
R91	RK3034	Chip R.	ERJ3GSYJ471V	
R92	RK3038	Chip R.	ERJ3GSYJ102V	
R93	RK3074	Chip R.	ERJ3G3YJ105V	
R94	RK3042	Chip R.	ERJ3GSYJ222V	
R95	RK3026	Chip R.	ERJ3GSYJ101V	
R96	RK3026	Chip R.	ERJ3GSYJ101V	
R97	RK3026	Chip R.	ERJ3GSYJ101V	
R99	RK3062	Chip R.	ERJ3GSYJ104V	
R100	RK3054	Chip R.	ERJ3GSYJ223V	
R101	RK3034	Chip R.	ERJ3GSYJ471V	
R102	RK3038	Chip R.	ERJ3GSYJ102V	
R110	RK3051	Chip R.	ERJ3GSYJ123V	
R111	RK3058	Chip R.	ERJ3GSYJ473V	
R112	RK3020	Chip R.	ERJ3GSYJ330V	
R113	RK3057	Chip R.	ERJ3GSYJ393V	
R114	RK3050	Chip R.	ERJ3GSYJ103V	
R115	RK3062	Chip R.	ERJ3GSYJ104V	
R116	RK3062	Chip R.	ERJ3GSYJ104V	
R117	RK3050	Chip R.	ERJ3GSYJ103V	
R118	RK3051	Chip R.	ERJ3GSYJ123V	
R119	RK3062	Chip R.	ERJ3GSYJ104V	
R120	RK3054	Chip R.	ERJ3GSYJ223V	
R122	RK3050	Chip R.	ERJ3GSYJ103V	
R123	RK3050	Chip R.	ERJ3GSYJ103V	
R124	RK3056	Chip R.	ERJ3GSYJ333V	
R125	RK3061	Chip R.	ERJ3GSYJ823V	
R126	RK3061	Chip R.	ERJ3GSYJ823V	
R127	RK3050	Chip R.	ERJ3GSYJ103V	
R128	RK3066	Chip R.	ERJ3GSYJ224V	
R129	RK3058	Chip R.	ERJ3GSYJ473V	

Ref No	Parts No.	Description	Parts Name	Ver
R130	RK0105	Chip R.	ERJ6GEYJ2R2V	
R131	RK3030	Chip R.	ERJ3GSYJ221V	
R132	RK3034	Chip R.	ERJ3GSYJ471V	
R133	RK3050	Chip R.	ERJ3GSYJ103V	
R134	RK3045	Chip R.	ERJ3GSYJ392V	
R135	RK3051	Chip R.	ERJ3GSYJ123V	
R136	RK3054	Chip R.	ERJ3GSYJ223V	
R137	RK3042	Chip R.	ERJ3GSYJ222V	
R141	RK3001	Chip R.	ERJ3GSY0R00V	
TC1	CT0033	Trimmer	ECRJA010A11W	
VR1	RH0106	Trim.Pot	EVM1YSX50BQ4	
VR2	RH0103	Trim.Pot	EVM1YSX50B14	
VR3	RV0017	Trim.Pot	RK09711-10KA-SW	
VR4	RV0018	Trim.Pot	RK09711-10KB	
W1	MRCJ06AA	Wire	DJ145	
W2	MWCK06AA	Wire	DJ145	
W3	MKCJH3AA	Wire	DJ145	
W4	UX1033	Wire	DJ145	
X1	XQ0053	Crystal	UM-1 21,855MHz	
X2	XK0002	Discriminator	CDBM455C7	
X3	XQ0052	Crystal	UM-5 12.800MHz	
XF1	XF0011	Crystal Filter	2l.400MHz 21M15B1	Wide
XF1	XF0023	Crystal Filter	2l.400MHz 21M7B1	Narrow
	TT1002		Tube	

Ref No	Parts No.	Description	Parts Name	Ver
		VCO Unit		
C201	CU3035	Chip C.	C1608JB1H102KT-A	
C202	CU3047	Chip C.	C1608JB1H103KT-A	
C203	CU3035	Chip C.	C1608JB1H102KT-A	
C204	CU3035	Chip C.	C1608JB1H102KT-A	
C205	GU3002	Chip C.	C1608CH1H010CT-A	
C206	CU3047	Chip C.	C1608JB1H103KT-A	
C207	CU3047	Chip C.	C1608JB1H103KT-A	
C208	CU3047	Chip C.	C1608JB1H103KT-A	
C209	CU3047	Chip C.	C1608JB1H103KT-A	
C210	CS0328	Chip Tantal	ECST0JY685R	
C211	CU3035	Chip C.	C1608JB1H102KT-A	
C212	CU3035	Chip C.	C1608JB1H102KT-A	
C213	CU3003	Chip C.	C1608CH1H020CT-A	
C214	CU3002	Chip C.	C1608CH1H010CT-A	
C215	CU3047	Chip C.	C1608JB1H103KT-A	
C216	CU3047	Chip C.	C1608JB1H103KT-A	
D201	XD0233	Diode	1SV217TPH4	
D202	XD0233	Diode	1SV217TPH4	
D203	XD0233	Diode	1SV217TPH4	
L201	QC0010	Chip L.	MLF3216E100M	
L202	QC0010	Chip L.	MLF3216E100M	
L203	QC0090	Chip L.	MLF3216E4R7M	
L204	QC0003	Chip L.	MLF3216A1R0M	
L205	QA0081	IFT	QA0081	
L206	QKA25C	Coil	MR2.5-2.5T-0.5	
Q201	XT0030	Transistor	2SC3356T1BR24/25	
Q202	XT0096	Transistor	2SC4099T106N	
Q203	XT0095	Transistor	2SC4081T106R	
Q204	XU0038	Transistor	UN2214-TX	
R201	RK3026	Chip R.	ERJ3GSYJ101V	
R202	RK3034	Chip R.	ERJ3GSYJ471V	
R203	RK3038	Chip R.	ERJ3GSYJ102V	
R204	RK3062	Chip R.	ERJ3GSYJ104V	
R205	RK3062	Chip R.	ERJ3GSYJ104V	
R206	RK3050	Chip R.	ERJ3GSYJ103V	
R207	RK3046	Chip R.	ERJ3GSYJ472V	
R208	RK3026	Chip R.	ERJ3GSYJ101V	
R209	RK3022	Chip R.	ERJ3GSYJ470V	
R210	RK3054	Chip R.	ERJ3GSYJ223V	
R211	RK3050	Chip R.	ERJ3GSYJ103V	
R212	RK3030	Chip R.	ERJ3GSYJ221V	
R213	RK3062	Chip R.	ERJ3GSYJ104V	
R214	RK3050	Chip R.	ERJ3GSYJ103V	
R215	RK3050	Chip R.	ERJ3GSYJ103V	
	UT0019		CK-1-2	
	TS0072		VCO Case	

Ref No	Parts No.	Description	Parts Name	Ver
		CTCSS Unit	UP0221	180T…1400non 1400A
C701	CU3027	Chip C.	C1608CH1H221JT-A	
C702	CU3027	Chip C.	C1608CH1H221JT-A	
C703	CU3059	Chip C.	C1608JF1E104ZT-A	
C704	CU3047	Chip C.	C1608JB1H103KT-A	
C705	CS0296	Chip Tantal	ECST1EY474R	
C706	CS0296	Chip Tantal	ECST1EY474R	
C707	CU3047	Chip C.	C1608JB1H103KT-A	
C708	CU3059	Chip C.	C1608JF1E104ZT-A	
C709	CU3059	Chip C.	C1608JF1E104ZT-A	
C710	CU3059	Chip C.	C1608JF1E104ZT-A	
C711	CS0296	Chip Tantal	ECST1EY474R	
CN701	UE0133	Connector	DF9A-11P-1V	
D701	XD0057	Diode	1SS184TE85L	
IC701	XA0203	IC	MX365ADW-TR	
Q701	XT0037	Transistor	2SC2412KT146R	
R701	RK3074	Chip R.	ERJ3GSYJ105V	
R702	RK3064	Chip R.	ERJ3GSYJ154V	
R703	RK3040	Chip R.	ERJ3GSYJ152V	
R704	RK3034	Chip R.	ERJ3GSYJ471V	
R705	RK3067	Chip R.	ERJ3GSYJ274V	
R706	RK3059	Chip R.	ERJ3GSYJ563V	
R707	RK3074	Chip R.	ERJ3GSYJ105V	
R708	RK3073	Chip R.	ERJ3GSYJ824V	
R709	RK3038	Chip R.	ERJ3GSYJ102V	
R710	RK3070	Chip R.	ERJ3GSYJ474V	
R711	RK3054	Chip R.	ERJ3GSYJ223V	
R712	RK3040	Chip R.	ERJ3GSYJ152V	
VR701	RH0060	Trim.Pot	MVR32 HXBRN473	
X701	XB0006	Crystal	CSB1000J 221	
	YZ0042		Adhesion G17	

PTT SW Unit/JACK Unit /RE Unit
OTHER/ROM2 Unit /PACKING

Ref No	Parts No.	Description	Parts Name	Ver
		PTT SW Unit		
SW301	UU0013	Switch	SKHUAB	
SW302	UU0013	Switch	SKHUAB	
SW303	UU0013	Switch	SKHUAB	
CN501	UE0147	Connector	TE 1608-PI28G05	
		JACK Unit		
JK501	UJ0022	Jack	HSJ112-01-540	
JK502	UJ0016	Jack	HSJ1423-01-050	
R501	RK4051	Chip R.	ERJ-14YS101V	
		RE Unit		
	UR0007		RK09710HH5RH 220	
		OTHERS		
	AB0011		3+8FeNi	
	AK0001		0B2+4FeNi	
	AK0002		0B2+4FeB/C	
	AV0004		0B26+6FeNi	
	AN0012		Dial Nut	
	AP0016		P2+8FeB/C	
C1	CC0119	CeramicC.	50V22PF CH	
	DP0063		LCD Panel	
	DP0111		LCD Panel	AN/QN
	ES0011AZ	Speaker	036S13D	
	FG0076		Battery Rubber	
	FG0092		Silicone Key 1 (T/E)	DJ180
	FG0093		Silicone Key 2 (T/E)	DJ180
	FG0094		Jack Cap	
	FG0095		PTT Rubber	
	FG0097		VOL Rubber	
	FG0100		EP/MIC Cushion	
	FG0112		Silicone Key 2 (1400)	1400
	FG0129		Silicone Key 2 (1400AN/QN)	AN/QN
	FM0068		Earth_Ring	
	FM0069		Antenna Earth	
	KB0038		Rear Case	
	KM0135		FrontCase	
	KM0141		Switch Cover (1400)	1400
	NB0047		Release Knob	
	NK0028		VOL Knob	
	NK0029		SQL Knob	
	ST0032		SP Holder	
	TG0014		SP Net	
	TS0071		RF Shield	
	UE0193Z		BNC Receptacle	
	UP0220A		P.C.B.	
W201	UX1035	Wire	DJ145	
	YZ0044		Screw Lock 1401C	
	YZ0116		Acrylic Tape	
	YZ0117		Switch Cover Tape (1400)	1400

Ref No	Parts No.	Description	Parts Name	Ver
		ROM2 Unit		
CN801	UE0132	Connector	DF9A-9P-1V	
IC801	XA0200	IC	X24C04S14-3.0T (EJ-14u)	
IC801	XA0201	IC	X24C16S-3.0T (EJ.15u)	
R801	RK3062	Chip R.	ERF3GSYJ104V	
R802	RK3062	Chip R.	ERF3GSYJ104V	
	HK0284		Carton Box EJ-14u	
	HK0285		Carton Box EJ-15u	
	HP0029		Protection Bag	
	UP0220B		CPU P.C.B.	
	YZ0121		Tape	
		Packing		
	AK0004	4PCS	0B2+3FeB/C	
	DS0357		Model Name Plate DJ-18	T
	DS0388A		Model Name Plate	page39
	DS0340		Model Name plate	
	EA57		Antenna M Low band EA	page39
	EA58		Antenna M high band EA	page39
	EBP26N		Ni-Cd(EG0016)	page39
	EDC-49		Charger (EJ0007)	page39
	EDC-50		Charger (EJ0008)	page39
	FG0096		Model Name Rubber	
	HK0280		Item Carton Box DJ-180	DJ180
	HK0287		Item CartonBox DJ1400	DJ1400
	HM0100		Carton Box	
	HU0037		Fixture	
	KM0137		Switch Cover	DJ180
	HP0016		Protection Bag 75 X 90	page39
	HP0028		Protection Bag 165 X 280	
	HP0031		Protection Bag 100 X 200	
	PH0006		Registration Card	
	PR0022		Seal E	
	PR0094		Seal A	
	PR0157		Seal TA	
	PR0158		Seal TB	
	PR0159G		Seal TS	
	PR0160		Seal TZ	
	PR0161		Seal A	
	PR0162		Seal B	
	PR0163		Seal B	
	PS0159G		Instruction Manual	DJ180
	PS0161		Instruction Manual	DJ1400
	PS0258A		Instruction Manual	AN/QN
	PT0004A		Lot Number Seal	
	YZ0117		Switch Cover Tape	
	YZ0118		Tape	
	YZ0121		Tape	
	EBC-3		Belt Ciip	
	BB0009Y		Hand Strap	

Model No.	DJ-180														DJ-180							DJ-1400									
Ref.No.	T	TA	TA2	TB	TB2	TM	TS	TSA	TZ	TD	TAD	TFD	TSD	TZD	E	EA	EB	ED	EAD	EBD		A	B	F	G	TM	D	AD	BD	QN	AN
DS0357	1	0	0	0	0	0	0	0	0	0	0	0	0	0	0	0	0	0	0	0	0	0	0	0	0	0	0	0	0	0	0
DS0388A	0	1	1	1	1	1	1	1	1	1	1	1	1	1	1	1	1	1	1	1	1	1	1	1	1	1	1	1	1	1	1
DS0352A																													1	1	
EA57	1	1	0	1	0	1	1	1	1	1	1	0	1	1	1	1	1	1	1	1	1	1	1	1	1	1	1	1	1	0	1
EA58	0	0	1	0	1	0	0	0	0	0	0	1	0	0	0	0	0	0	0	0	0	0	0	0	0	0	0	0	0	1	0
EBP26N	1	1	1	1	1	1	1	1	1	0	0	0	0	0	1	1	1	0	0	0	1	1	1	1	1	1	0	0	0	0	0
EBP28N																													1	1	
EDC49	1	0	0	1	1	0	0	1	0	0	0	0	0	0	0	0	0	0	0	0	1	0	0	1	1	0	0	0	0		
EDC50	0	1	1	0	0	1	1	0	1	0	0	0	0	0	1	1	1	0	0	0	0	1	1	0	0	1	0	0	0		
FG0092	1	1	1	1	1	1	1	1	1	1	1	1	1	1	1	1	1	1	1	1	0	0	0	0	0	0	0	0	0	0	0
FG0093	1	1	1	1	1	1	1	1	1	1	1	1	1	1	1	1	1	1	1	1	0	0	0	0	0	0	0	0	0		
FG0101	1	1	1	1	1	1	1	1	1	1	1	1	1	1	1	1	0	1	1	0	0	0	0	0	0	0	0	0	0		
FG0112	0	0	0	0	0	0	0	0	0	0	0	0	0	0	0	0	0	0	0	0	1	1	1	1	1	1	1	1	1	0	0
FG0129																													1	1	
HK0280	1	1	1	1	1	1	1	1	1	1	1	1	1	1	1	1	1	1	1	1	0	0	0	0	0	0	0	0	0		
HK0287	0	0	0	0	0	0	0	0	0	0	0	0	0	0	0	0	0	0	0	0	1	1	1	1	1	1	1	1	1		
HP0016	1	1	1	1	1	1	1	1	1	1	1	0	1	1	1	1	1	1	1	1	0	0	0	0	0	0	0	0	0	1	1
KM0136	0	0	0	0	0	0	0	0	0	0	0	0	0	0	0	0	1	0	0	1	1	1	1	1	1	1	1	1	1	1	1
KM0137	1	1	1	1	1	1	1	1	1	1	1	1	1	1	1	1	1	1	1	1	0	0	0	0	0	0	0	0	0		
KM0138	1	1	1	1	1	1	1	1	1	1	1	1	1	1	1	1	0	1	1	0	0	0	0	0	0	0	0	0	0	0	0
KM0141	0	0	0	0	0	0	0	0	0	0	0	0	0	0	0	0	0	0	0	0	1	1	1	1	1	1	1	1	1		
PH0006	1	0	0	0	0	1	0	0	0	1	0	0	0	0	0	0	0	0	0	0	1	0	0	0	0	1	1	0	0		
PR0174	0	0	0	0	0	0	0	0	0	1	1	1	1	1	0	0	0	1	1	1	0	0	0	0	0	0	1	1	1		
PS0159	1	1	1	1	1	1	1	1	1	1	1	1	1	1	1	1	1	1	1	1	0	0	0	0	0	0	0	0	0	0	0
PS0161	0	0	0	0	0	0	0	0	0	0	0	0	0	0	0	0	0	0	0	0	1	1	1	1	1	1	1	1	1	0	0
PS0258A																													1	1	
SEAL		TA	TA2	TB	TB2	TM	TS	TSA	TZ		TA	TFD	TS	TZ	E	EA	EB	E	EA	EB		A	B	F	G	TM		A	B		
EDH11	0	0	0	0	0	0	0	0	0	1	1	1	1	1	0	0	0	1	1	1	0	0	0	0	0	0	1	1	1		

ADJUSTMENT

1) Required Test Equipment

1. Regulated Power Supply

Supply voltage: 2V to 15V
Current: 2A or more
Standard voltage: 13.8V

2. Frequency Counter

Measurable frequency: Up to 1GHz
Measurements stability: 0.2ppm or so

3. Power Meter

Measurable frequency: Up to 500MHz
Impedance: 50Ω, unbalanced
Measuring range: Full scale of 10W or so

4. Linear Detector

Measurable frequency: Up to 500MHz
Characteristics: Flat
CN: 60dB or more

5. Digital Multimeter

Voltage range: FS = 18V or so
Input resistance: 1MΩ or more

6. Oscilloscope

Measurable frequency: DC to 30MHz

7. AF Voltmeter

Measurable frequency: 50Hz to 1MHz
Maximum sensitivity: 1mV or more

8. Spectrum Analyzer

Measuring range: DC to 2GHz or more

9. SSG

Maximum frequency: 1GHz or more
Output: -20dB/0.1μV to 120dB/1V
Output Impedance: 50Ω, unbalanced

10. Dummy Load

Impedance: 8Ω
Dissipation: 2W or more

11. Distortion Meter

Measurable frequency: 30Hz to 100kHz
Input level: 50mV to 10V rms

2) Before Adjustment

Remove four screws from the radio as shown below.

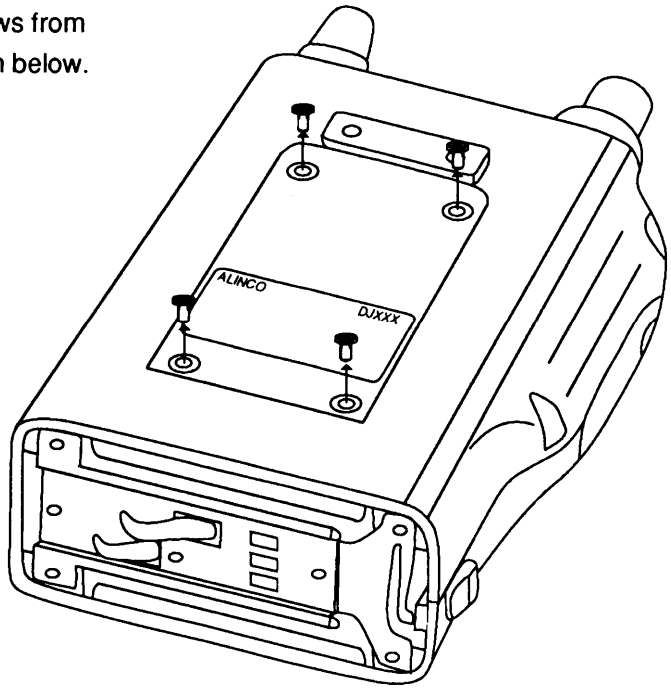

3) ADJUSTMENT for DJ180 DJ1400 (The Wide Version)

PLL Adjustment

Item	Condition	Measurement		Adjustment			Speclficatlons/ Remarks
		Test-equipment	Ternlinal	Unit	Parts	Method	
RX VCO	Frequency: 145.00MHz	Digital Multimeter	TPl	VCO	L205		1.5+/-0.05V
Reference Frequency	Frequency: 145.00MHz PTT: ON	Frequency Counter	ANT	RF	TC1		145.00MHz+/-50Hz

TX Adjustment

Item	Condition	Measurement		Adjustment			Speclficatlons/ Remarks
		Test-equipment	Ternlinal	Unit	Parts	Method	
Power	Freq: ***** MHz PTT: ON Power: Low	PowerMeter	ANT	RF	VR1		0.4+/-0.05W
DEV	Freq: ***** MHz PTT: ON Power: Low AG output: 1KHz, -30dBm	AF OSC Liner Detector	ANT	RF	VR2		4.3KHz +/-0.2KHz/DEV
DTMF	Freq: ***** MHz PTT: ON Power: Low Push1"keyon"			DTMF	VR401		3.0KHz +/-0.5KHz/DEV
88.5HzTone	Freq: ***** MHz PTT: ON Power: Low			TONE	VR701		0.8KHz+/-0.1KHz/DEV

RX Adjustment

Item	Condition	Measurement		Adjustment			Speclficatlons/ Remarks
		Test-equipment	Ternlinal	Unit	Parts	Method	
RXFront End	Frequency: ***** MHz SSGmod: 1KHz, 3.5kHzDEV	SSG Oscilloscope AFVoltmeter Distorlion Meter	SP	RF	L4~L7	12dB SINAD: MAX	12dB SINAD - 6.0dBuV(EMF)

*****MHz

DJ-180 T/E/ DJ1400 /A/B	145.00MHz
DJ-180TA2,TB2	162.00MHz

3) ADJUSTMENT for DJ1400AN/QN (The Narrow Version)

PLL Adjustment

Item	Condition	Measurement		Adjustment			Speclficatlons/ Remarks
		Test-equipment	Ternlinal	Unit	Parts	Method	
RX VCO	Frequency: 145.00MHz	Digital Multimeter	TPl	VCO	L205		1.5+/-0.05V
Reference Frequency	Frequency: 145.00MHz PTT: ON	Frequency Counter	ANT	RF	TC1		145.00MHz+/-50Hz

TX Adjustment

Item	Condition	Measurement		Adjustment			Speclficatlons/ Remarks
		Test-equipment	Ternlinal	Unit	Parts	Method	
Power	Freq: ******MHz PTT: ON Power: Low	PowerMeter	ANT	RF	VR1		0.4+/-0.05W
DEV	Freq: ******MHz PTT: ON Power: Low AG output: 1KHz, -30dBm	AF OSC Liner Detector	ANT	RF	VR2		2.2KHz +/-0.2KHz/DEV
DTMF	Freq: ******MHz PTT: ON Power: Low			DTMF	VR401		0.8KHz +/- 0.05KHz/DEV
88.5HzTone	Freq: ******MHz PTT: ON Power: Low			TONE	VR701		0.35KHz+/-0.05kHz/DEV

RX Adjustment

Item	Condition	Measurement		Adjustment			Speclficatlons/ Remarks
		Test-equipment	Ternlinal	Unit	Parts	Method	
RXFront End	Frequency: ******MHz SSGmod: 1KHz, 1.7kHzDEV	SSG Oscilloscope AFVoltmeter Distorlion Meter	SP	RF	L4~L7	12dB SINAD: MAX	12dB SINAD - 6.0dBuV(EMF)

*****MHz

DJ1400AN	145.00MHz
DJ1400QN	162.00MHz

5) Adjustment Quick Reference

		Wide Version	Narrow Version
Parts	**Item**	**Specifications**	
L4	RX Sensitivity	-6dBμV (12dB SINAD)	
L5	RX Sensitivity	-6dBμV (12dB SINAD)	
L6	RX Sensitivity	-6dBμV (12dB SINAD)	
L7	RX Sensitivity	-6dBμV (12dB SINAD)	
L205	VCO Frequency	1.5 +/-0.05V	
TC1	Reference Frequency	145MHz +/- 50Hz	
VR1	TX Low Power	0.4 +/-0.05W	
VR2	Deviation	4.3kHz +/- 0.2kHz	2.2KHz+/-0.2KHz
VR401	DTMF Deviation	3.0kHz +/-0.5kHz	0.8KHz+/-0.05KHz
VR701	CTCSS Deviation	0.8kHz +/-0.1kHz	0.35KHz+/-0.05KHz

6) Adjustment Points

1. RF Unit Adjustment

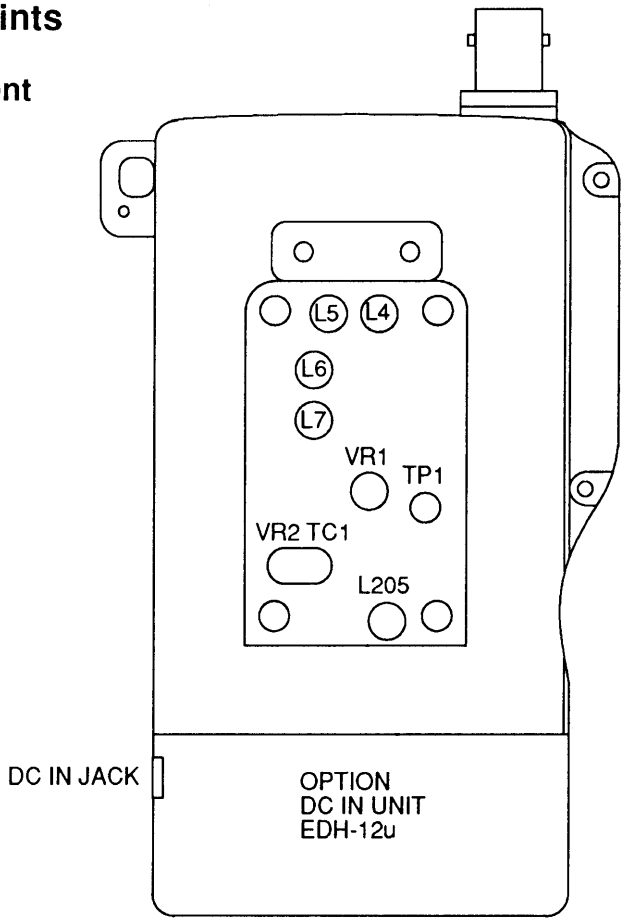

- Attach the DC IN unit to the radio and power supply voltage 13.8V will be supplied.

2. DTMF Unit Adjustment

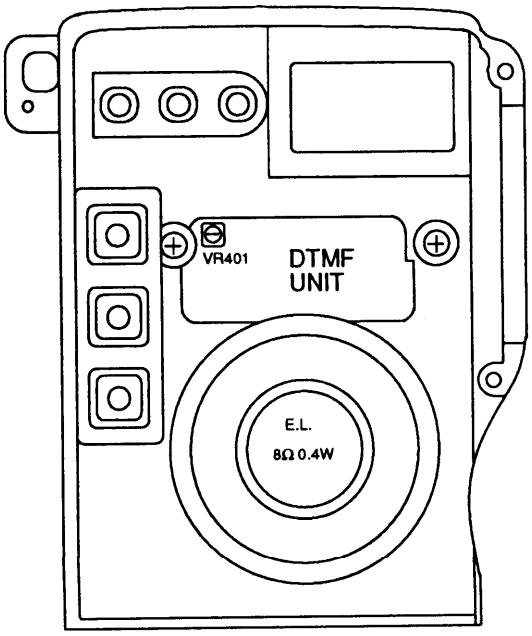

3. CTCSS Unit Adjustment

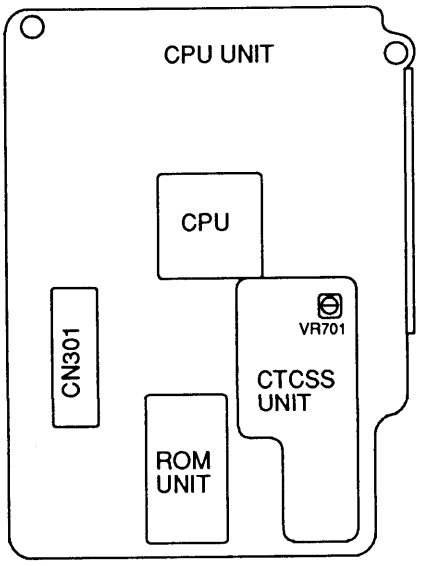

CIRCUIT DIAGRAM

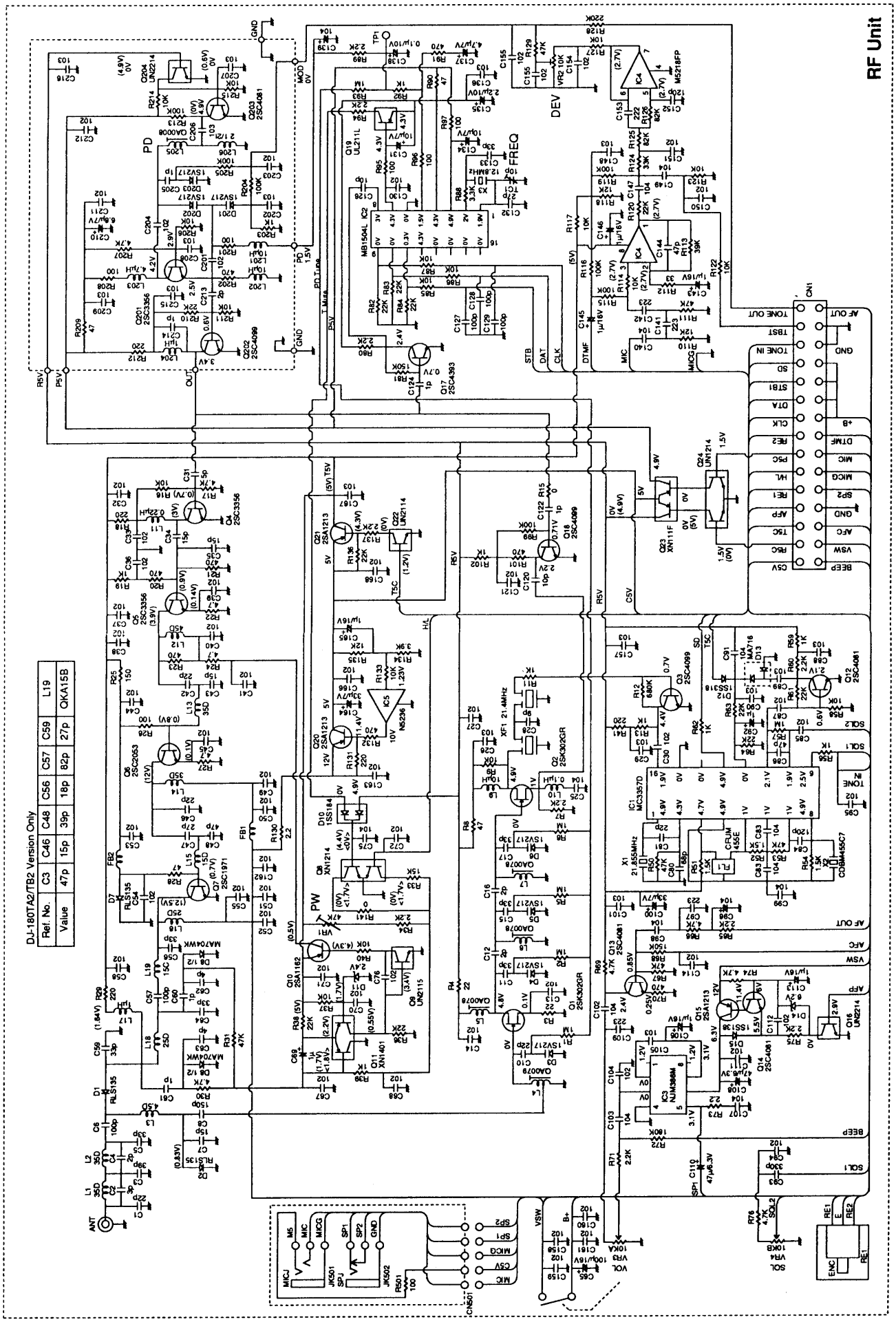

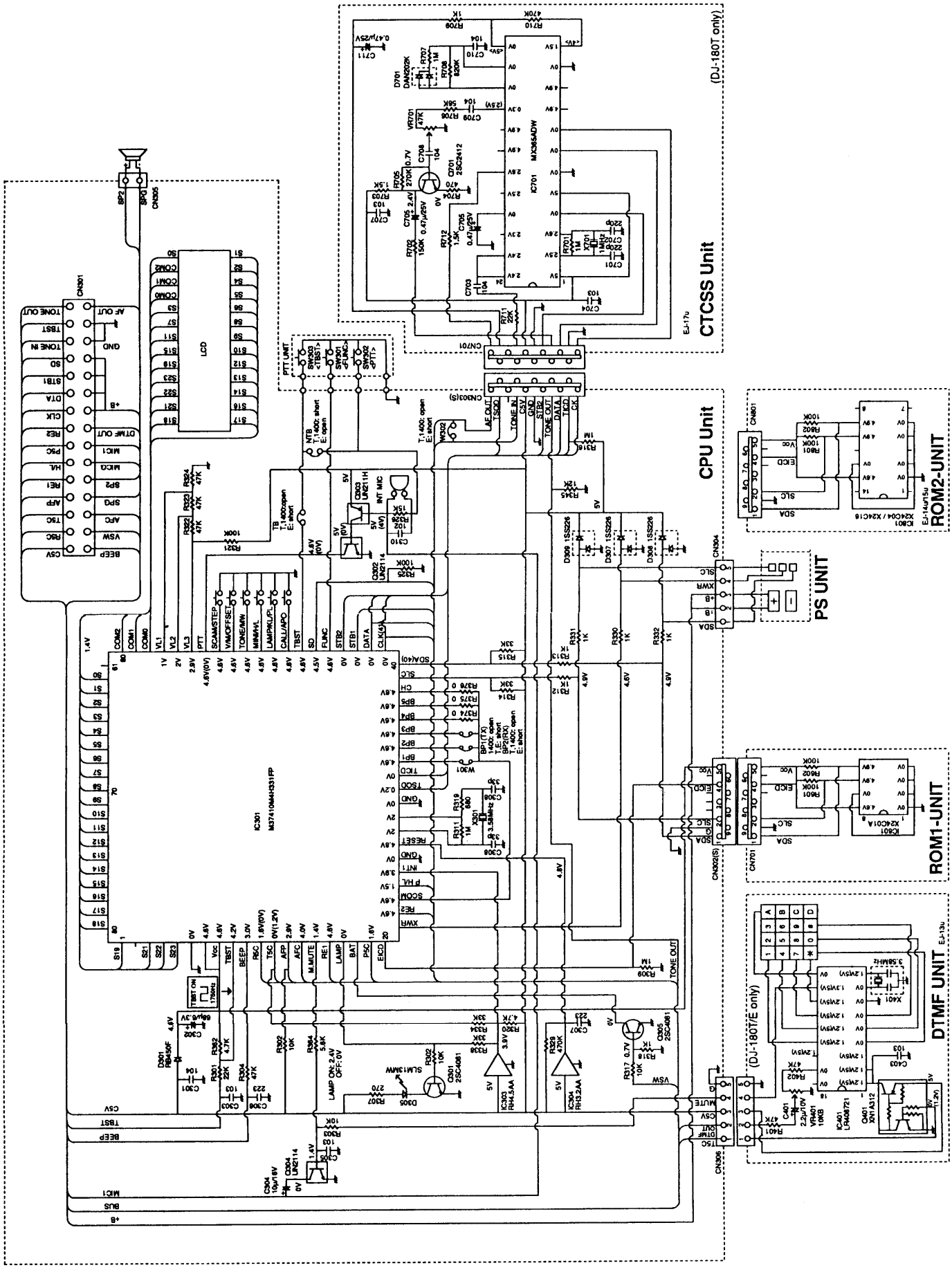
CTCSS Unit
(DJ-180T only)
CPU Unit
PS UNIT
ROM2-UNIT
ROM1-UNIT
DTMF UNIT
(DJ-180T/E only)
LCD
IC301
M37410M4H331FP
IC701
MX365ADW
CN301
CN304
CN306
CN701
CN801
CN302(S)
CN303(S)
CN701
PTT UNIT
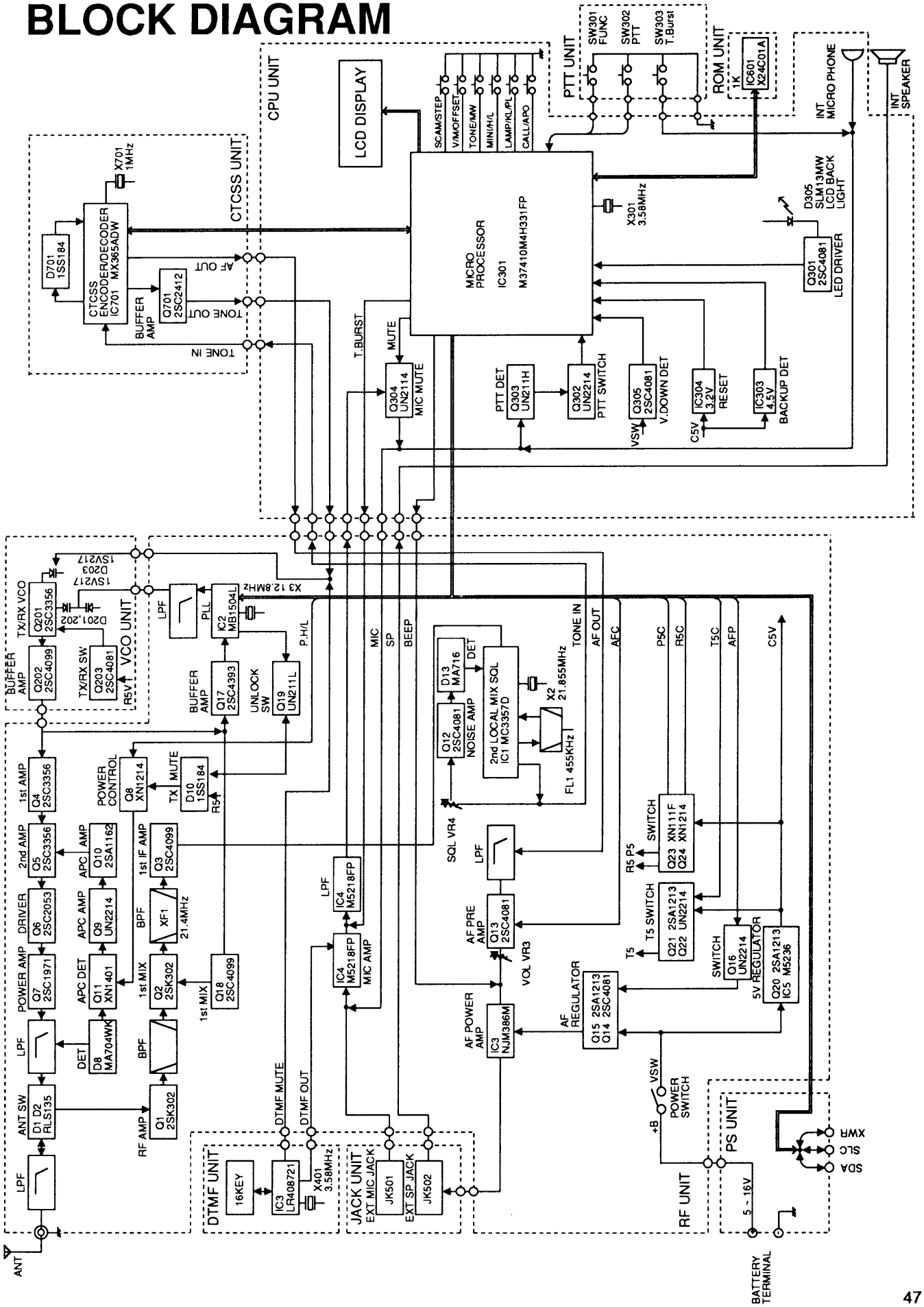
BLOCK DIAGRAM